CHAPTER II

CIVIL

Table of Contents

1. PURPOSE
   1.1 Metrication

2. DESIGN CRITERIA
   2.1 Site Design
      2.1.1 Reference
      2.1.2 Building Siting
      2.1.3 Roads, Streets, Access Drives, and Parking Areas
      2.1.4 Walks
   2.2 Grading
      2.2.1 Reference
      2.2.2 Finished Floor Elevations
      2.2.3 Turfed Areas
      2.2.4 Roads, Streets, Access Drives, Parking Areas, and Walks
      2.2.5 Special Facilities
      2.2.6 Finish Grade Contours & Spot Elevations
   2.3 Pavement
      2.3.1 Reference
      2.3.2 Design
   2.4 Storm Drainage
      2.4.1 Reference
      2.4.2 General
      2.4.3 Determination of Rainfall Runoff
      2.4.4 Drainage Systems
   2.5 Outside Utility Systems
      2.5.1 Reference
      2.5.2 General
      2.5.3 Locations
      2.5.4 Water Distribution
      2.5.5 Sanitary Sewers
      2.5.6 Gas Distribution
      2.5.7 Aircraft and Automotive Fuel Supply and Distribution
      2.5.8 Oil-Water Separators
      2.5.9 Corrosion Control
      2.5.10 Materials
   2.6 Fencing
      2.6.1 Reference
      2.6.2 Requirements

Table of Contents (cont.)

2.7 Railroads
2.7.1 Reference
2.7.2 General

2.8 Turf and Landscaping
2.8.1 Reference
2.8.2 General
2.8.3 Design

APPENDIX A - Plates of Standard Details, Criteria Illustrations, and Storm Drainage Design Aids

APPENDIX B - Design Checklist - Civil

CHAPTER II

CIVIL

1. **PURPOSE**: The purpose of this chapter is to provide information that will clarify and supplement standard criteria and design guidance for the site development aspects of military facilities. The information in this chapter is intended to facilitate efficient preparation and review of designs, ensure uniform and consistent presentation of designs, and minimize or eliminate repetitive design deficiencies. Special instructions will be issued for the design of family housing projects.

1.1 **METRICATION**: The metric units used are the International System of Units (SI) adopted by the U.S. Government as described in Chapter I, paragraphs 3 and 4.2.1. On the plates in this chapter, dimensions are in millimeters except meters are used for typical site layouts for building location, streets, parking, service drives, etc.

1.1.1 Concrete Reinforcement. This document uses metric concrete reinforcement designations conforming to the ASTM A635M-98 SI system.

1.1.2 Pipe Sizes. This document uses both SI and I-P units for pipes. There are some commercial metric pipes available in the market, and the designer should specify the use of hard metric pipe where it is suitable for the project.

1.1.3 Since many storm drainage criteria references and methods have not been converted to metric, design computations may continue to be performed in I-P units with the results presented with dual I-P and SI values. Useful metric conversion factors are as follows:

Metric Conversions

From English I-P	To Metric SI	Multiply by
Acre	Square Kilometer	0.00405
Acre	Hectare	0.405
Square Mile	Square Kilometer	2.590
Cubic Feet per Second	Cubic Meters per Second	0.0283
Feet per Second	Meters per Second	0.3048
Acre-Foot	Cubic Meter	1233.489
Inch	Millimeter	25.4
Inch per Hour	Millimeters per Hour	25.4

2. **DESIGN CRITERIA**:

2.1 **Site Design**: Separate drawings shall be provided for the following site development items: Demolition, Site Layout, Grading including storm drainage structures, Site Utilities, and Turfing and Landscaping. Complete design calculations necessary for that stage of development of the submittal shall be included in the design analysis for site development items such as storm drainage, storm drainage structures and all outside utilities except electrical which should be included in the electrical design analysis. Horizontal and vertical control shall be provided for all new facilities.

2.1.1 Reference:

2.1.1.1 TI 800-01, Design Criteria.

2.1.1.2 MIL-HDBK 1190, Facility Planning and Design Guide.

2.1.1.3 TM 5-803-5, Installation Design.

2.1.1.4 MIL-HDBK-1008C, Fire Protection for Facilities.

2.1.1.5 TM 5-822-2, General Provisions and Geometric Design for Roads, Streets, Walks, and Open Storage Areas.

2.1.1.6 Uniform Federal Accessibility Standards, Federal Register.

2.1.1.7 Americans with Disabilities Act Guidelines

2.1.1.8 TM 5-803-14, Site Planning and Design

2.1.1.9 TM 5-853-2, Security Engineering – Concept Design

2.1.1.10 TM 5-853-3, Security Engineering – Final Design

2.1.2 Building Siting:

2.1.2.1 Building Orientation: Normally, in this Southwestern area, layouts should emphasize orienting buildings to minimize effects of summer solar heat load and to take advantage of the summer prevailing breeze, where feasible, without excessive costs for grading, roads, drainage, landscaping, or other features.

2.1.2.2 Building Setback: One-story buildings usually will be located at least 15 meter from the centerline of 7 meter

to 8.5 meter wide streets. A setback of 21 meter to 30 meter should be provided for wider streets and for larger and taller structures or to resolve topographic grading limitations. Where a permanent building line has been established, it will usually be maintained.

2.1.2.3 Force Protection: The site should be laid out based on the facility threat security level to protect against exterior attack by providing standoff distance between an aggressor or bomb, barriers, and to facilitate visual monitoring of the site. See requirements in TM 5-853-2 and TM 853-3.

2.1.2.4 Building Spacing: Space between structures will provide open areas in accordance with good land-use planning and due consideration of future development plans that will provide an appropriate environment commensurate with the importance of the facility. Fire clearance separations will be maintained in accordance with MIL-HDBK-1008C (Army) or MIL-HDBK-1190 (Air Force). Early in project design (10%), verify e maximum slope of 25%. If it becomes necessary to use slopes steeper than 25% slope protection??shall be provided. T2.1.3

2.1.3 Roads, Streets, Access Drives, and Parking Areas:

2.1.3.1 Geometric Features:. Geometric design of all roads, streets, access drives, and parking areas shall conform to applicable portions of TM 5-803-5, TM 5-803-14, TM 5-822-2, TI 800-01, TM 5-853-2, TM 5-853-3, and the applicable standard detail plates and drawings included in this chapter. Also verify with the local instillation that access for fire equipment is adequate. Access drives, service drives, and entrances to parking areas will not be directly from Class A, B, and C streets unless otherwise unavoidable. Radii, to back of curb, for intersections are standardized as follows for design:

Primary and Secondary Intersection	9 meters
Tertiary intersections (including residential streets)	6 meters
Special:	
Access drives at end parking space	1.5 meters
Curb return at residential driveway	1.5 meters

2.1.3.1.1 Parking: Parking allocations, when not set by the Using Agency, shall comply with the USACE AEI. Handicap parking allocations shall comply with the Uniform Federal Accessibility Standards. Perimeter concrete curbs and gutters will normally be provided for all parking areas and access drives in built-up areas. In remote or little used areas, concrete curbs and gutters will be used only when required to control drainage. Where flexible pavements are used, removable prefabricated reinforced concrete wheel stops, as approved, may be used. Wheel stops may be used around the perimeter of flexible paved parking areas for the following or similar facilities:

USAR military equipment parks.

Outlying training areas such as field stations and range facilities.

Industrial facilities such as warehouses, shops, motor parks, technical facilities and storage areas.

2.1.3.1.2 Service Drives: Service drive design should be as simple as criteria, function, and location justify. Width of drives to unloading ramps or docks for usual types of trucks or tractor trailers are:

Trucks, SU = 3.6 meters

Semi-trailers, C43 to C50 = 4.8 meters

2.1.3.1.3 Pavement at Loading Platforms: The minimum paved area depth in front of loading platforms at warehouses and storage facilities shall be as follows:

For van-type (SU) trucks = 20 meters, including street width.

For semi-trailer, (C43 to C50) = 26 meters, including street width (Depots = 29 meters)

The first 6 meters adjacent to the platform shall be concrete.

2.1.3.1.4 Pavement at POL Facilities: Concrete pavement at least 4.5 meters wide shall be provided adjacent to fill stands. Prevent fuel spillage from entering either the underground storm or sanitary sewer systems, or from being impounded within 30 meters of any structure.

2.1.3.1.5 Access Roads at Ammunition Storage Areas: Primary access roads at ammunition storage areas shall be 6.7 meters wide. Service roads within the storage area shall be 5.5 meters wide.

2.1.3.1.6 Pavement at Dumpster Pads: The first 4.5 meters of pavement adjacent to dumpster pads shall be concrete.

2.1.4 Walks:

2.1.4.1 General: Provide an ample functional system of walks connecting structures, operational areas, parking areas, streets and other walks as pedestrian traffic demands. The location and width will give full consideration to the master plan future development. Design of pedestrian walks shall be in compliance with TM 5-803-5, TM 5-803-14, TM 5-822-2, and criteria presented herein. Walks subject to use by the physically handicapped shall meet the requirements of the Uniform Federal Accessibility Standards.

2.1.4.1.1 Location: Walks paralleling buildings will be located beyond the eave drip line and at least 1.5 meter from the foundation. Walks paralleling parking areas will be at least 1.8 meter wide, and will abut the back of the curb.

2.1.4.1.2 Width: Minimum walk width will be 1.2 meter with 600 mm incremental increases as required to accommodate pedestrian traffic. Building entrance walk widths will be appropriate for the building entrance design. The following table is for general guidance in selecting the appropriate walk width for selected facilities.

TABLE I

Facility	Width of Walk			
	Main 1/ Entrance	Secondary Entrance 1/ or Exit 2/	Collection	Service
Barracks	2.00m	1.25m	2.00m 4/	1.25m
BOQ	2.00m	1.25m	2.00m	1.25m
Mess	2.50-3.75m 3/	1.25m	2.00-2.50m	1.25m
Theaters	3.00-3.75m 3/	2.00m	2.00-2.50m	1.25m
Clubs	2.50-3.00m 3/	2.00m	2.00m	1.25m
Hospitals	2.50-3.00m 3/	2.00m	2.00-2.50m	1.25m
Chapels	2.50-3.00m 3/	2.00m	1.25m	1.25m
Family Housing	1.25m	1.25m	2.00m	1.25m
Administrative	2.00m	1.25m	2.00m	1.25m

NOTE:

1/ Widen near building to equal width of building entry way, steps, platform, etc.

2/ Provide no walks to emergency (fire) exists.

3/ For short distance near buildings.

4/ When serving over 1,000 men, see TM 5-822-2, paragraph 3.4.4, for increased width.

2.1.4.1.3 Construction: Walks shall be constructed of concrete unless otherwise directed. Construction details shall comply with the standard detail plates included in this chapter.

2.1.4.1.4 Special Walks: A Troop formation walk 3 meters wide and 18 meters long per 100 men will be provided near each dormitory (preferably in front). The length may be increased for short distances to reach a nearby walk intersection.

2.2 **Grading**:

2.2.1 Reference:

2.2.1.1 TI 800-01, Design Criteria

2.2.1.2 TM 5-822-2, General Provisions for Geometric Design for Roads, Streets, Walks and 0pen Storage Areas.

2.2.1.3 TM 5-803-7, Civil Engineering Programming Airfield and Heliport Planning Criteria.

2.2.1.4 TM 5-848-2, Handling of Aircraft and Automotive Fuels.

2.2.1.5 TM 5-803-5, Installation Design.

2.2.1.6 Uniform Federal Accessibility Standards, Federal Register.

2.2.2 Finished Floor Elevations: The establishment of a building's finished floor elevation shall be based on subjective as well as objective judgments. On many projects, the preservation of existing trees, natural ground forms, and drainage patterns is of prime importance. Normally, the finished floor elevation will be primarily determined on the basis of economics, considering the type of foundation, crawl space vents, building space, access for vehicles and handicapped personnel, elevations of sewer mains and storm drainage receptor, existing and future adjoining facilities, access to borrow and waste areas, flood profiles, and the site's geology as well as its topography. A building's finished floor elevation will be a minimum of 300mm above the highest point of the adjacent outside finished grade, unless there is an overriding technical reason to deviate. Where adequately protected from any localized storm drainage flows, the finished floor elevation of family housing and buildings surrounded by pavement may be set a minimum of 200mm above outside finished grade.

2.2.3 Turfed Areas:

2.2.3.1 Adjacent to Building: Outside finished grade will slope away from the building at a 5% grade for the first 3 meters. The 5% grade should be extended to 6 to 9 meters in areas with highly expansive soil. When site conditions require the use of steep slopes near buildings, a berm a minimum of 2 meters wide at a 5% grade will be provided adjacent to the building. These requirements should be indicated on the grading plan with critical spot elevations. Where the adjacent outside grade is brought above the building floor level for energy conservation, aesthetic, or economic reasons, the outside finished grade shall slope down from the wall line at a 20% minimum grade for at least 1.5 meter, and a maximum grade of 25%.

2.2.3.2 Lawn Areas: Lawn areas 3 meters beyond the building line) shall have a 2% minimum slope and a desirable maximum slope of 25%. If it becomes necessary to use slopes steeper than 25% slope protection shall be provided. The type and amount of slope protection provided shall be based on the soil type, slope length, and aesthetic, environmental, and economic considerations.

2.2.3.3 Ditches and Swales: The preferred minimum longitudinal ditch or swale gradient is 0.5 percent with an absolute minimum of 0.3%. Side slopes on ditches or swales will be no steeper than l vertical on 2-1/2 horizontal. Steeper slopes shall be paved.

2.2.4 Roads, Streets, Access Drives, Parking Areas and Walks:

2.2.4.1 Roads, Streets, and Access Drives: Gradients for roads, streets and access drives shall be as outlined in TM 5-803-14 and TM 5-822-2. Grade changes in excess of 1% will be accomplished by means of vertical curves. The length of vertical curves will be determined in accordance with TM 5-803-14, and TM 5-822-2. Profiles are mandatory for vertical control of centerline gradients. Roads, streets and highways will normally be shown by the use of half-plan/half-profile type drawings.

2.2.4.2 Parking Areas: Pavement grades shall provide positive surface drainage with a 1% minimum slope in the direction of drainage. Slope grade in direction of parking 1-1/2% maximum for 90 degree parking, 1% maximum for 60 and 40 degree parking. Slope grade perpendicular to direction of parking 5% maximum for bituminous or concrete surfaces and 3% for other surfaces.

2.2.4.3 Walks: The grade of walks will be in accordance with TM 5-803-14. Steps in walks should be avoided, but when used shall be in compliance with TM 5-822-2. Walks and ramps serving facilities that are to be accessible to and usable by the physically handicapped shall meet the requirements of the Uniform Federal Accessibility Standards.

2.2.5 Special Facilities:

2.2.5.1 Airfields: Gradients shall be as specified in TM-803-7.

2.2.5.2 Fuel Loading/Unloading Facilities: Gradients shall be as described in TM 5-848-2.

2.2.6 Finish Grade Contours and Spot Elevations: Finish grade contours at 0.25 meter intervals and spot elevations shall be provided to construct all site development features to elevations within the above grading criteria and tolerances as specified in the guide specifications. Spot elevations on the drawings should be sufficient so that interpolation between contours is not required for structures, grading or paved areas; some examples are: corners of paved areas, low points, high points, flow lines of swales or ditches, changes in degree of slope and grading at corners of buildings to ensure positive drainage away from the building. The use of cut or fill symbols in lieu of finish grade contours is not permitted.

2.3 **Pavement**:

2.3.1 Reference:

2.3.1.1 TM 5-822-5, Pavement Design for Roads, Streets, Walks, and Open Storage Areas.

2.3.1.2 DG 1110-3-204, Design guide for Army and Air Force Airfields, Pavements, Railroads, Storm Drainage and Earthwork.

2.3.1.3 TM 5-823-3, Rigid and Overlay Pavement Design.

2.3.1.4 TM 5-825-2, Flexible Pavement Design for Airfields.

2.3.1.5 TM 5-825-3, Rigid Pavements for Airfields.

2.3.1.6 TI 800-01, Design Criteria.

2.3.1.7 DG 1110-3-204,(AFP 88-71), Design Guide for Army and Air Force Airfields, Pavements, Railroads, Storm Drainage and Earthwork.

2.3.2 Design:

2.3.2.1 General: The design of the pavement structure will be accomplished by the district and the data will be furnished to the designer. This information will be attached to Part II - Civil, of the design analysis. TI 800-01 outlines general engineering criteria for designing airfield pavements for facilities at Army installations.

2.3.2.2 Flexible Pavement: Design and details of construction of flexible pavements shall be in accordance with TM 5-822-5, TM 5-825-2, and the details shown on the standard

plates included in this chapter. Do not concentrate storm runoff on flexible pavement. If swales are necessary within flexible pavement, concrete valley drains shall be provided.

2.3.2.3 Rigid Pavement: Design and details of construction of rigid pavement shall be in accordance with TM 5-822-5, TM 5-823-3, TM 5-825-3, DG 1110-3-204 and the details shown on the standard detail plates included in this chapter. A joint pattern will be provided for all rigid pavements. When more than one type of joint is used, the joint pattern shall clearly distinguish between types of joints and include a cross-reference to the appropriate joint detail shown elsewhere in the plans. The edge of rigid pavement where future construction will occur shall be a thickened edge for pavements 200mm or less in thickness, and shall be a keyed construction joint for pavements thicker than 200mm. The joint pattern shall provide sufficient vertical control information capable of providing accurate elevations for the setting of paving forms.

2.4 **Storm Drainage**:

2.4.1 Reference:

2.4.1.1 TM 5-820-1, Surface Drainage Facilities for Airfields and Heliports.

2.4.1.2 TM 5-820-2, Subsurface Drainage Facilities for Airfield pavement.

2.4.1.3 ETL 1110-3-345, Drainage Layers for Pavements.

2.4.1.4 TM 5-820-3, Drainage and Erosion Control Structures for Airfields and Heliports.

2.4.1.5 TM 5-820-4, Drainage for Areas Other than Airfields.

2.4.1.6 U.S. Weather Bureau Technical Paper No. 40, May 1961, Rainfall Frequency Atlas of the United States for Durations from 30 minutes to 24 hours and return periods from 1 to 100 years.

2.4.1.7 NOAA Technical Memorandum NWS HYDRO-35, June 1977, Five to 60-minute Precipitation Frequency for the Eastern and Central United States.

2.4.1.8 Rainfall Intensity - Duration - Frequency Curves available from the District Office.

No.	Title	Use At
1	Abilene, Texas	Dyess AFB
2	Alamogordo, New Mexico	Holloman AFB
3	Albuquerque, New Mexico	Kirtland AFB
4	Altus, Oklahoma	Altus AFB
5	Amarillo, Texas	
6	Austin, Texas	Bergstrom AFB
7	Big Spring, Texas	
8	Brownsville, Texas	
9	Clovis, New Mexico	Cannon AFB
10	Dallas, Texas	
11	Del Rio, Texas	Laughlin AFB
12	El Paso, Texas	Fort Bliss
13	Fort Polk, Louisiana	Fort Polk
14	Fort Smith, Arkansas	Fort Chaffee
15	Fort Worth, Texas	Carswell AFB
16	Gallup, New Mexico	Fort Wingate
17	Houston, Texas	Ellington AFB
18	Killeen, Texas	Fort Hood
19	Las Cruces, New Mexico	White Sands Missile Range
20	Lawton, Oklahoma	Fort Sill
21	Little Rock, Arkansas	Little Rock AFB Pine Bluff Arsenal
22	Lubbock, Texas	Reese AFB
23	Memphis, Tennessee	Blytheville AFB
24	Oklahoma City, Oklahoma	Tinker AFB, Vance AFB
25	San Angelo, Texas	Goodfellow AFB
26	San Antonio, Texas	Brooks AFB, Fort Sam Houston, Kelly AFB, Lackland AFB Randolph AFB
27	Santa Fe, New Mexico	SantaFe National Cemetery
28	Shreveport, Louisiana	Louisiana AAP Longhorn AAP
29	Texarkana, Arkansas	Lone Star AAP Red River AAP
30	Wichita Falls, Texas	Sheppard AFB

NOTE: For those areas not covered by the curves available from the District, references in paragraphs 2.4.1.6 and 2.4.1.7 will be used to obtain the rainfall intensity.

2.4.2 General: The design of storm drainage facilities for airfields will be in accordance with TM 5-820-1 and TM 5-820-3. The design of storm drainage facilities for areas other than airfields shall be in accordance with TM 5-820-4, except as modified or supplemented by this chapter. Profiles

shall be required for underground storm drainage systems and sections shall be required for culverts.

2.4.3 Determination of Rainfall Runoff:

2.4.3.1 Methods: Runoff from drainage areas of 2.6 km^2 (1 square mile) or less will be determined by the use of the Rational Formula as defined below. For drainage areas larger than 2.6 km^2 (1 square mile) when unit-hydrograph data is available or where detailed consideration of ponding is required, computation should be by unit-hydrograph and flow-routing procedures.

Rational Formula: $Q = C(I-F)A$, where

- Q is the discharge in cubic feet per second
- C is the terrain factor
- I is the rainfall intensity in inches/hour
- F is the infiltration rate in inches/hour
- A is the drainage area in acres

TABLE II

MINIMUM VALUES FOR SOLVING FOR Q IN THE ABOVE EQUATION

Drainage Area (% Paved)	tc (Minutes)	C	F
100	10	1.00	0.0
90	11	.96	.06
80	12	.92	.12
70	13	.88	.18
60	14	.84	.24
50	15	.80	.30
40	16	.76	.36
30	17	.72	.42
20	18	.68	.48
10	19	.64	.54
0	20	.60	.60

2.4.3.2 Design Storm Frequencies: Design storm frequencies shall be in accordance with TM 5-820-1 or TM 5-820-4, as applicable.

2.4.3.3 Time of Concentration (tc): The nomograph shown on Plate C73 in this chapter is recommended for use in determining the time of concentration. The minimum times of concentration for various surfaces are as follows: turfed areas, 20 minutes; paved areas, l0 minutes; roofed areas, 10 minutes. After the time of concentration has been determined, it will be used to determine the rainfall intensity (I) using Intensity Duration curves.

2.4.3.4 Design Discharge: For small drainage systems (tc = 30 minutes/or less), "peak on peak" discharges shall be used to determine the design discharge; for large drainage systems (tc greater than 30 minutes) phased discharges shall be used for major trunk lines, and peak discharges for inlets and minor lines.

2.4.3.5 Calculations: Calculations used to determine the discharge shall be tabulated on the form on Plate C-74 in Appendix A; or similar.

2.4.3.6 The Hydrologic Engineering Center (HEC) located at Davis, California has developed computer programs to compute runoff using unit hydrograph procedures. Information on these and other programs that apply unit-hydrograph and flow-routing procedures can be obtained from the supervising district’s Hydrology and Hydraulics staff through the Technical Leader.

2.4.4 <u>Drainage Systems</u>:

2.4.4.1 General: The drainage system layout will be designed to best meet the operational requirements of the facility. The system will be as economical as practicable, taking into consideration topography, ultimate development of drainage area, possible future extension, outfall locations, and coordination with existing drainage systems and other existing or future underground utilities.

2.4.4.2 Surface Systems:

2.4.4.2.1 Street Drainage: Street drainage will usually be accomplished by the use of curb and gutter and curb inlets. Curb gaps will be considered in areas where roadside ditches are used. The center one-third of the street should not convey runoff during the passing of the design storm. Inverted crown sections for the streets shall not be used

without prior approval. Curb inlets should not be located in the radius of street intersections, at curb returns, or where pedestrian traffic is most likely to occur.

2.4.4.2.2 Channels: The preferred minimum gradient shall be 0.5% with an absolute minimum of 0.3%. Coefficients of roughness, "n", and maximum permissible velocities for various surfaces are listed in Table III.

2.4.4.2.3 POV Parking and Hardstands: Do not concentrate the flow of storm runoff on asphalt pavement. Convey storm runoff within POV parking areas to perimeter curbs by sheetflow. If it becomes necessary to concentrate flow within the parking area, provide concrete paving at the swale flowline. Concentrated flow will not be permitted to flow from POV parking or hardstand areas onto adjacent gravel areas or turfed slopes. Sheetflow from parking areas and hardstands onto adjacent gravel or turfed areas must be examined for possible erosive effects. A recommended method for evaluation and prevention of such erosion is shown on Plate C-77 of this chapter. Due to the large size of hardstand areas at motorpools, runoff will normally be best managed by a design approach limiting the size of areas drained by sheetflow and intercepting runoff by drainage structures placed either within the hardstand or at the pavement edge. For motorpool-type projects at Fort Polk, this design approach is mandatory.

2.4.4.2.4 Culverts: The preferred gradient of culverts shall be 0.5% with an absolute minimum of 0.3%. Concrete headwalls or end sections will be provided for all culverts.

2.4.4.2.5 Sizing of Culverts: Culverts shall be designed in accordance with TM 5-820-4, Appendix B. Inlet versus outlet control for culverts shall be determined and included in the Design Analysis.

TABLE III

SUGGESTED COEFFICIENTS OF ROUGHNESS ("n") AND MAXIMUM PERMISSIBLE MEAN VELOCITIES FOR OPEN CHANNELS, DITCHES AND SWALES IN MILITARY CONSTRUCTION

MATERIAL	Maximum Mean Manning's "n"	Velocity(mps)
Concrete, with surfaces as indicated:		
Formed, no finish ----------	.015	---
Trowel finish ----------	.012	---
Float finish ----------	.013	*
Gunite, good surface ---------	.020	*
Concrete, bottom float finished, sides as indicated:		
Cement rubble masonry	.030	*
Cement rubble masonry, plastered	.024	*
Rubble lined, uniform section	0.035-0.045	2.13-3.96
Asphalt:		
Smooth	0.013	3.05
Rough	0.016	2.44-2.74
Earth, uniform section:		
Sandy silt, weathered	0.035	0.61
Silt clay	0.030	1.07
Soft shale	0.035	1.07
Clay	0.030	1.83
Soft sandstone	0.040	2.44
Gravelly soil, clean	0.040	1.83
Natural earth, with vegetation	0.035-0.150	1.22 - **

* Velocities should be less than critical and based on cross section shape and slope of channel.

** For projects at Fort Polk, velocity shall not exceed 1.2 mps.

NOTE:
Selection of "n" values should reflect anticipated maintenance conditions and the selection of maximum permissible mean velocity should reflect conditions to be expected following construction.

2.4.4.3 Underground Systems:

2.4.4.3.1 General: Whenever possible, pipe crowns will be matched in elevations. Profiles of pipes should show all existing and new underground utilities and pertinent surface features. The minimum pipe gradient shall be 0.3%, and piping should be designed to provide a minimum velocity of 0.75 mps and limit outfall velocities to non-erosive values (usually 1.2 to 1.8 mps depending upon soil types). If non-erosive velocities cannot be attained, erosion protection shall be provided.

2.4.4.3.2 Sizing of Inlets: The design of surface inlets and curb inlets shall be in accordance with TM 5-820-4.

2.4.4.3.3 Sizing of Pipes: New underground storm drainage pipes shall be sized by computation of backwater surface profiles, using a form similar to form shown on Plate C-75 in Appendix A of this chapter. The minimum, pipe size shall be 305 millimeters (12 inches), unless the pipe is a part of the roof drain system, in which case the minimum size of laterals and collector pipes is 102 millimeters (4 inch). Materials for drainage and collector pipes shall conform with guide specification requirements. The following notes are furnished concerning use of the form:

- Calculations will begin at the lower end of the new system. Determine the elevation of the water surface at the outfall, or assume that the hydraulic gradient is at the crown of the pipe, whichever is higher.

- If the hydraulic gradient goes below the invert of a section of pipe, at the next structure upstream, set the hydraulic gradient elevation equal to the critical depth of the downstream pipe or the hydraulic gradient elevation, whichever is greater.

- To determine the loss coefficient "K" at structures (Column 11), allow a loss of 0.10 for each of the following:

... Manhole or inlet structure
... Each additional incoming line
... Inflow at the structure (surface inlet, etc.)
... Change in pipe alignment
... Change in pipe slope
... Change in pipe size

- Designers are warned that the coefficient of friction "n" varies significantly for the various piping materials listed in the specifications. The designer shall verify that pipes are properly sized for all piping materials included in the project specifications. Separate backwater computations should be performed for concrete and unlined corrugated metal pipes to ensure that pipe sizes are compatible with material options. Variations in pipe sizes required by such computations shall be indicated on the plans.

- When phasing of discharges is required (see paragraph 2.4.3.4), computations shall be tabulated on a form similar to Plate C-76 in appendix A to this chapter.

2.4.4.4 Subsurface Drainage: The district will usually be aware of field conditions requiring subsurface drainage and will provide the designer with sufficient soil and flow information to design the system. Design of such facilities will be in accordance with TM 5-820-2 and ETL 1110-3-535.

2.4.4.5 Roof Drainage: Downspouts will be connected to an underground collection system whenever a new or existing underground storm drainage system is in the vicinity of the new facility. Storm water will not be discharged into sanitary sewers. Grading adjacent to structures shall direct storm water discharged from downspouts onto splash blocks away from the structure, and protective measures will be provided where down spouts discharge onto erosion susceptible soils or gravel surfaces.

2.5 **Outside Utility Systems**:

2.5.1 Reference:

2.5.1.1 HQUSACE Architectural and Engineering Instructions - Design Criteria (USACE AEI).

2.5.1.2 MIL-HDBK-1008C, Fire Protection for Facilities

2.5.1.3 TM 5-813-1, Water Supply, Sources and General Considerations.

2.5.1.4 TM 5-813-3, Water Supply, Water Treatment.

2.5.1.5 TM 5-813-4, Water Supply, Water Storage.

2.5.1.6 TM 5-813-5, Water Supply, Water Distribution Systems.

2.5.1.7 TM 5-814-1, Sanitary and Industrial Wastewater Collection - Gravity Sewers and Appurtenances.

2.5.1.8 TM 5-8l4-2, Sanitary and Industrial Collection - Pumping Stations and Force Mains.

2.5.1.9 TM 5-814-3, Domestic Wastewater Treatment.

2.5.1.10 TM 5-848-1, Gas Distribution.

2.5.1.11 TM 5-848-2, Handling of Aircraft and Automotive Fuels.

2.5.1.12 TM 5-630, Natural Resources and Land Management.

2.5.1.13 ASCE - Manual and Reports on Engineering Practice, No. 37, Design and Construction of Sanitary and Storm Sewers.

2.5.2 General:

2.5.2.1 No main, principal line, or part of a utility system should be located or sized without first considering future construction as proposed by the master plan. Extensions of existing utility mains should take future loads into consideration to evaluate the cost of overbuilding.

2.5.2.2 Most utility services in built-up areas shall be underground, with the possible exception in warehouse and industrial areas where above ground service will not conflict with the architectural character.

2.5.2.3 TI 800-01 outlines general criteria for siting of utilities for facilities at Army installations.

2.5.3 Locations:

2.5.3.1 Underground utility lines such as sanitary sewer, water, and gas, should not be placed under existing or proposed pavements, but preferably between back slope of road ditch and building, or back of curb. Such utilities may also be located along approximate centerline of larger blocks. Diagonal alignments in future construction areas should be avoided. See TM 5-813-5 for relative location of water and sanitary sewer lines.

2.5.3.2 Do not locate above ground utility features in front of, or in such a manner as to detract from the facility, make landscaping more difficult, or restrict or negate close-in recreational areas (e.g., a fire plug placed in the middle of

a planned court and recreational area between buildings will void the primary purpose of the court).

2.5.3.3 High pressure gas lines shall not be closer than 30 meters from an occupied building without special protective provisions.

2.5.4 Water Distribution: Design shall be in accordance with TM 5-813-1, TM 5-813-5, and MIL-HDBK-1008C and AFM 88-10, Chapter 6. When existing water mains are extended, the necessity for pressure tests, leakage tests, and sterilization of the new portions creates need for valves for isolation of the extensions from existing lines. Project designs shall include provisions for valves to be installed, if none exist, at points where new extensions connect to existing mains. The valves will be available for future use to aid in isolating areas of the distribution system as indicated in paragraph 12, TM 5-813-5. Engineering studies shall be made to determine validity of indicated exceptions to these valve requirements in special cases such as a very short extension or where a valve was previously provided a short distance from the end of an existing main.

2.5.4.1 Domestic: Velocities in water lines shall be kept under 2 meters per second to prevent possible water hammer effects. Meters shall be provided when requested by the using service.

2.5.4.2 Fire Protection: Design shall be in accordance with the applicable sections of the references listed and the National Fire Codes prepared by the National Fire Protection Association. Post indicator valves (PIV's) for fire protection sprinkler systems will be installed according to NFPA 24 and in locations that minimize the risk of mechanical damage. If this is not possible, bollards or guardrails will be used to protect the PIV's. Where valves cannot be properly guarded or they will interfere with user operations, outside screw-and-yoke valves in pits will be used. The installation fire department will be consulted on the need for and type of valve supervision.

2.5.4.3 Turf and Landscape Irrigation: For projects where irrigation systems are authorized, preparation of plans and specifications to provide such facilities will be accomplished by the designer of the turf and landscaping. Irrigation system design will normally consist of a performance specification and a site plan delineating limits and types of required coverage. Application rates will be in accordance with Section VI of TM-5-630. Specific system requirements

(type of valves, controller, etc.) will be obtained from the Using Service.

2.5.4.4 Provide profiles for water distribution and supply lines when crossings of other new or existing underground utilities will occur and the crossings are not otherwise profiled.

2.5.5 Sanitary Sewers: Design shall be in accordance with TM 5-814-1 and ASCE Publication No. 37. The design should ensure flow velocities that will maintain self-cleansing action. Provide invert elevations for all cleanouts and manholes. Provide profile for all sewers involving more than one manhole.

2.5.6 Gas Distribution: Design shall be in accordance with TM 5-848-1. Provide meters, when requested, by the using service.

2.5.7 Aircraft and Automotive Fuel Supply and Distribution: Design shall be in accordance with TM 5-848-2.

2.5.8 Oil-Water Separators:

2.5.8.1 General: Oil-water separators will be provided for the pretreatment of wastewater containing free-floating oils and grease prior to discharge into sanitary sewers. In addition to the requirements below, the designer shall determine the pretreatment limits required by the receiving wastewater utility and shall be selected or designed to meet these discharge limits.

2.5.8.2 Prepackaged Separators: The use of manufactured, prepackaged separators, through utilization of a performance-type specification, is recommended for the pretreatment of wastewater such as that collected by floor drains in maintenance shops. In such cases, attention must be given to the anticipated flow rate and the quantity of dirt and grit contained in the wastewater. High-volume wastewater containing large amounts of solids will usually require design of a cast-in-place separator as discussed below.

2.5.8.3 Cast-in-Place Separators: Cast-in-place reinforced concrete separators will normally be required for the pretreatment of wastewater generated at outdoor facilities such as washracks. Such separators are usually more economical than commercially manufactured separators designed to treat the high flow rates characteristic of these types of facilities. Where large quantities of sediments are expected,

a grit chamber will be provided either upstream of the separator, or integrally with the separator at the upstream end of the separator. In all cases, when the flow rate resulting from storm runoff significantly exceeds the normal operating flow rate, a bypass will be included in order to divert the storm water into the storm drainage system instead of allowing it to flow into the treatment system. Design of cast-in-place oil/water separators will generally conform to Chapters 5 and 6 of the American Petroleum Institute's Manual on Disposal of Refinery Wastes and will provide minimum detention times for Army projects. Standard configurations and design parameters developed from the referenced publications are shown on Plates C70, C71 and C72 of Appendix "A" of this chapter. Slotted, rotation-type or belt type oil skimmer and waste oil storage tanks will be provided in accordance with user requirements.

2.5.9 Corrosion Control:

2.5.9.1 General: Cathodic protection shall be provided as required by Chapter VI (Electrical) of this manual.

2.5.9.2 Cathodic protection is not normally required for cast iron pipe, ductile iron pipe, or other metal gravity storm drain or gravity sanitary sewer lines.

2.5.10 Materials: Provide all viable pipe options listed in the specifications.

2.6 **Fencing**:

2.6.1 Reference:

2.6.1.1 FM 19-30, Physical Security.

2.6.1.2 AFM 86-2, Standard Facility Requirements.

2.6.1.3 TM 5-853-1, Security Engineering – Project Development

2.6.1.4 TM 5-853-2, Security Engineering – Concept Design

2.3.1.5 TM 5-853-3, Security Engineering – Final Design

2.6.2 Requirements: Fencing will follow the general outline established in FM 19-30 and AFM 86-2. The using service will establish the type, height, and extent of fencing required. Plates C1 and C2 of Appendix A of this chapter show standard

details of unsensored security fences. Details of sensored fences are available on the Internet through the Corps of Engineers TECHINFO system.

2.7 **Railroads**:

2.7.1 Reference:

2.7.1.1 TM 5-850-2, Railroad Design and Rehabilitation.

2.7.1.2 American Railway Engineering Association (AREA) Manual.

2.7.2 General: Design shall be in accordance with TM 5-850-2 and the AREA Manual. Type of service required will be provided by the using service.

2.8 **Turf and Landscaping**:

2.8.1 Reference:

2.8.1.1 TM 5-803-13, Landscape Design and Planting Criteria.

2.8.2 General:

2.8.2.1 The livability and pleasantness of appearance of a military installation can be vastly improved by the judicious selection and placement of trees, shrubs, and grassed areas. The tendency to over plant when landscaping should be avoided. Plantings shall be planned to not provide a hiding place for terrorists aggressors to hide or place a bomb to attack the facility. See criteria in TM 5-853-1, TM 5-853-2 and TM 5-853-3. Plate C4 in Appendix A of this chapter contains typical landscape details.

2.8.2.2 Cost estimates developed in the planning and programming stages must include provisions for erosion control, landscaping, and irrigation facilities where appropriate.

2.8.3 Design:

2.8.3.1 Particular emphasis shall be placed on utilizing plants that are adaptable to the Southwest. Plants selected shall minimize the need for irrigation while maximizing the cooling benefits (e.g., shading windows and condensing units). Consideration shall be given to minimizing the problems caused

by the run-off of rainwater through the use of pavers with voids that permit absorption into permeable soils.

2.8.3.2 Erosion control and landscaping shall be completely coordinated with the other site development elements, even though landscaping may be contracted apart from the project and its site development work. Standards of the appropriate technical specialty shall be followed. For additional landscape design guidance refer to Architectural Chapter III.

APPENDIX A

CHAPTER II

STANDARD DETAILS, CRITERIA ILLUSTRATIONS, STORM DRAINAGE DESIGN AIDS

1. Plates C1 through C4 are standard designs available on CADD. These plates may be obtained from the district supervising the design.

2. Plates C5 through C72 illustrate criteria, and show standard details that should be incorporated into the design where appropriate. Criteria illustrations included in this section are intended to clarify specific criteria requirements that are stated elsewhere in this chapter or appear in criteria referenced herein. The standard details represent many of the commonly used details required in military designs. It is to be noted that many of the details are of general nature and will require some editing to fit specific design requirements.

3. Plates C73 through C77 are design aids for storm drainage computations. Plates C74 through C76 typically should be included in the design analysis to present the storm drainage computations. Alternative/equivalent ways of presenting the drainage computations may be used provided they clearly show the analysis in a way that an engineer may review it.

TABLE OF CONTENTS

Plate No.	Title
	CHAINLINK FENCE
C1	Chainlink Security Fence Details
C2	Chainlink Fence Gate Details
	TRAFFIC METAL BEAM GUARDRAIL
C3	Metal Beam Guard Fence Details
	LANDSCAPING
C4	Landscape Details
	PARKING AREAS
C5	Parking Area and Drive Distances from Streets, Intersections and Buildings
C6	Typical Service Drive Turn-Around
C7	P.O.V. Parking Area - Layout Standards
C8	P.O.V. Parking Area - Notes to Designer
C9	End Island Detail I
C10	End Island Detail II
C11	End Island Detail III
C12	Typical Sections of Divider Strips
C13	Wheel Stop Details
	TRAFFIC SIGN POST
C14	Traffic Sign Mounting Details
	SIDEWALKS
C15	Handicapped Curb - Ramp Details
C16	Sidewalk Details
C17	Concrete Sidewalk Intersection Details
C18	Sidewalk Drain Details
	SPLASH BLOCK
C19	Splash Block Detail
	MOW STRIP
C20	Concrete Mow Strip Detail

TABLE OF CONTENTS (cont.)

Plate No.	Title
	DUMPSTER PAD
C21	Dumpster Pad Detail
	VEHICULAR PIPE GUARD
C22	Pipe Guard Detail
	ROADWAYS AND PAVEMENT
C23	Typical Road Section - Rigid
C24	Typical Road Section - Flexible
C25	Typical Road Section - Gravel
C26	Construction Joints (Plain Concrete Pavement)
C27	Contraction Joints (Reinforced Pavement)
C28	Contraction Joint (Plain Concrete Pavement)
C29	Construction Joints (Reinforced Pavement)
C30	Joint Sealant Details – Roads, Streets, and Open Storage Areas
C31	Expansion Joints
C32	Juncture of New Flexible and New Rigid Pavement
C33	Juncture of New Rigid and Existing Flexible Pavement
C34	Juncture of New Flexible and Existing Rigid Pavement
C35	Juncture of New Flexible and Existing Flexible Pavement
C36	Concrete Header Detail
C37	Rigid Pavement With Curb and Gutter
C38	New Flexible Pavement With Curb and Gutter
	CURB AND GUTTER
C39	New Curb and Gutter Abutting Existing Flexible Pavement
C40	New Curb and Gutter Abutting Existing Flexible Pavement
C41	Standard Barrier Type Concrete Curb and Gutter
C42	Mountable Concrete Curb and Gutter
C43	Curb Terminal Detail

TABLE OF CONTENTS (cont.)

Plate No.	Title
	PAVEMENT REMOVAL AND REPLACEMENT FOR UTILITY INSTILLATION
C44	Pavement Replacement Detail (Rigid Pavement)
C45	Pavement Replacement Detail (Flexible Pavement)
	STORM DRAIN MANHOLE
C46	Standard Manhole Details
C47	Precast Storm Drain Manhole
	STORM DRAIN INLET
C48	Standard Curb Inlet Details
C49	Mountable Curb Inlet Details
C50	Standard Surface Inlet
C51	Surface Inlet Grate and Frame
	STORM DRAIN HEADWALL
C52	Type A Concrete Headwall for Concrete Pipe (Single Pipe - 90 Deg.)
C53	Type B Concrete Headwall for Concrete Pipe (Multiple Pipes - 90 Deg.)
C54	Table of Dimensions - Type A&B Concrete Headwalls
C55	Table of Dimensions - Type A&B Concrete Headwalls
	STORM DRAIN CURB GAP
C56	Curb Gap With Pad
C57	Curb Gap With Chute
	SANITARY SEWER
C58	Sanitary Sewer Manhole Notes
C59	Sanitary Sewer Manhole Details (Cast-In-Place)
C60	Sanitary Sewer Manhole Details (Precast Concrete)
C61	Sanitary Sewer Manhole Details (Precast Concrete)
C62	Typical Section - Drop Type Sewer Connection
C63	Typical Cleanout (Sanitary Sewer)

TABLE OF CONTENTS (cont.)

Plate No.	Title
	FIRE AND WATER UTILITY
C64	Typical Fire Hydrant Setting
C65	Detail - Post Indicator Valve
C66	Detail - Valve Box
C67	Thrust Block Details
	GAS UTILITY
C68	Typical Gas Service Connection
C69	Blow-off and Drip
	OIL/WATER SEPARATOR
C70	Oil/Water Separator
C71	Oil/Water Separator (with Sediment Chamber)
C72	Details - Inlet Tubes & Reaction Baffles
	STORM DRAINAGE COMPUTATIONS
C73	Nomograph For Time Of Concentration
C74	Runoff Computations
C75	Table - Size and Profile of Underground Storm Drains
C76	Table - Phasing of Discharge for Storm Drainage
C77	Analysis of Slope Erosion Due To Sheetflow

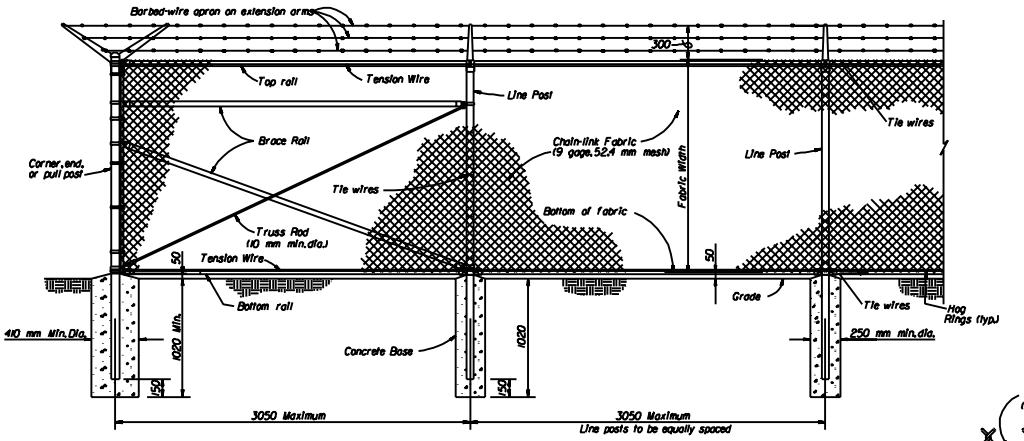

CHAIN-LINK SECURITY FENCE DETAIL
N.T.S.

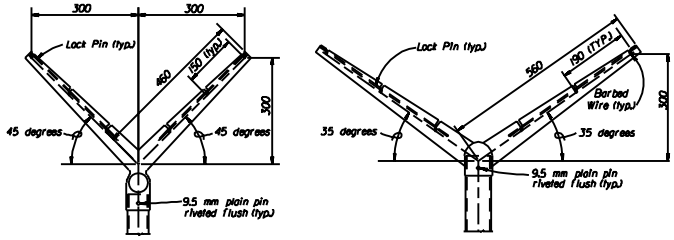

LINE POST CORNER POST

EXTENSION ARM DETAILS
N.T.S.

STEEL POST SCHEDULE			
USE AND SECTION	MINIMUM OUTSIDE DIMENSIONS (NOMINAL)		
	FABRIC LESS THAN 1800mm	FABRIC 1800mm TO 2400mm	FABRIC OVER 2400mm
Corner, End & Pull Posts			
Tubular - Round	60 mm O.D.	73 mm O.D.	100 mm O.D.
Tubular - Square	50 mm SQ.	64 mm SQ.	75 mm SQ.
C-Section (Roll-Formed)	90 mm x 90 mm	90 mm x 90 mm	———
Line Posts			
Tubular - Round	48 mm O.D.	60 mm O.D.	73 mm O.D.
H-Section	57 mm x 43 mm	57 mm x 43 mm	57 mm x 43 mm
C-Section (Roll-Formed)	48 mm x 41 mm	57 mm x 43 mm	———
Top, Bottom & Brace Rails			
Tubular - Round	42 mm O.D.		
Tubular - Square	38 mm O.D.		
H-Section	41 mm x 38 mm		
C-Section (Roll-Formed)	41 mm x 32 mm		

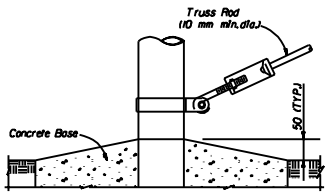

TRUSS ROD AND BAND

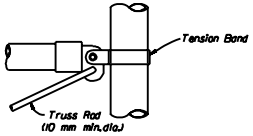

ROUND POST

H-BEAM

BRACE RAIL CLAMP DETAILS

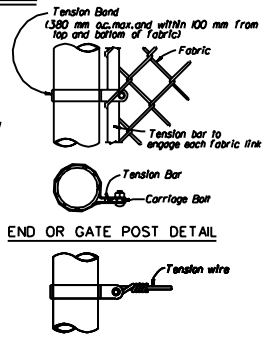

END OR GATE POST DETAIL

TENSION BAND DETAIL

FASTENING DETAILS
N.T.S.

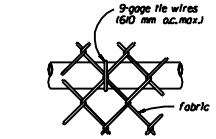

TOP OR BRACE RAIL ATTACHMENT

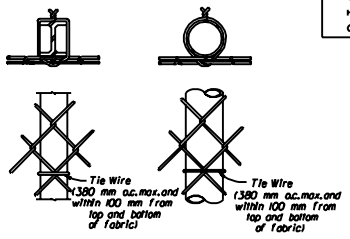

H-BEAM ROUND POST

LINE POST ATTACHMENTS
N.T.S.

NOTES:

1. Details shown are to clarify requirements and are not intended to limit other types of fence sections and methods of installation.
2. Wire ties, rails, posts, and braces shall be constructed on the secure side of the fence alignment. Chain-link fabric shall be placed on the opposite side of the secure area.
3. C-Section posts shall be installed so that the void inside the post is completely filled with concrete up to the top of the foundation.
4. Bottom rail shall be attached to double rail ends using 10 mm carriage bolts as shown.

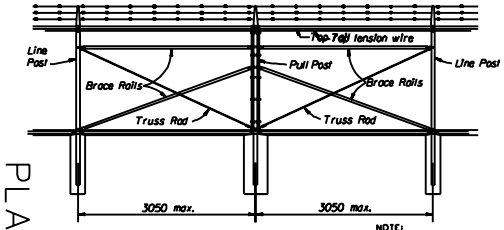

NOTE:
Provide brace panel whenever straight runs exceed 152.4 M.

BRACE PANEL DETAIL
N.T.S.

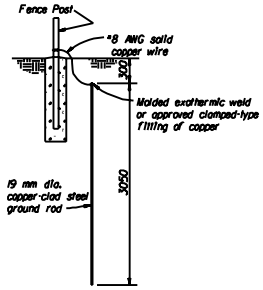

GROUNDING DETAIL
N.T.S.

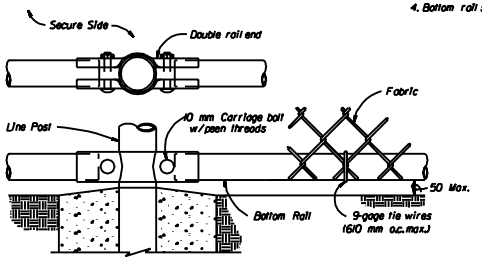

BOTTOM RAIL DETAILS
N.T.S.

CHAIN-LINK SECURITY FENCE DETAILS

PLATE C1

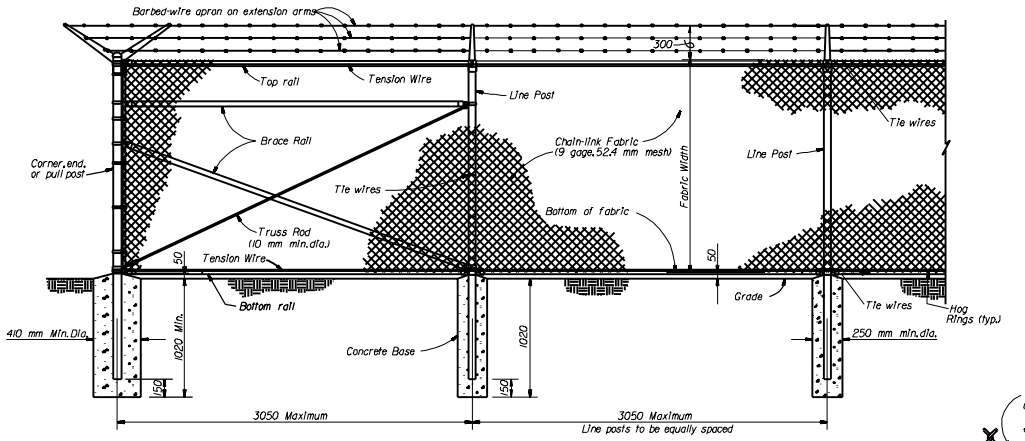

CHAIN-LINK SECURITY FENCE DETAIL

N.T.S.

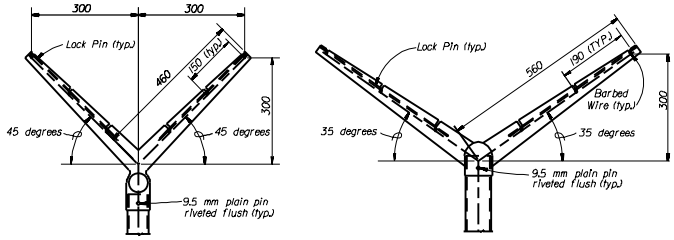

LINE POST

CORNER POST

EXTENSION ARM DETAILS

N.T.S.

STEEL POST SCHEDULE			
USE AND SECTION	MINIMUM OUTSIDE DIMENSIONS (NOMINAL)		
	FABRIC LESS THAN 1800mm	FABRIC 1800mm TO 2400mm	FABRIC OVER 2400mm
Corner, End & Pull Posts			
Tubular - Round	60 mm O.D.	73 mm O.D.	100 mm O.D.
Tubular - Square	50 mm SQ.	64 mm SQ.	75 mm SQ.
C-Section (Roll-Formed)	90 mm x 90 mm	90 mm x 90 mm	——
Line Posts			
Tubular - Round	48 mm O.D.	60 mm O.D.	73 mm O.D.
H-Section	57 mm x 43 mm	57 mm x 43 mm	57 mm x 43 mm
C-Section (Roll-Formed)	48 mm x 41 mm	57 mm x 43 mm	——
Top, Bottom & Brace Rails			
Tubular - Round	42 mm O.D.		
Tubular - Square	38 mm O.D.		
H-Section	41 mm x 38 mm		
C-Section (Roll-Formed)	41 mm x 32 mm		

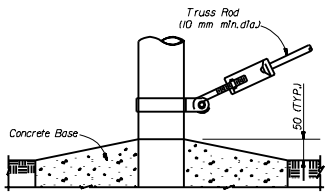

TRUSS ROD AND BAND

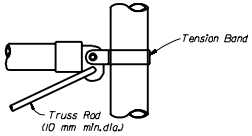

ROUND POST

H-BEAM

BRACE RAIL CLAMP DETAILS

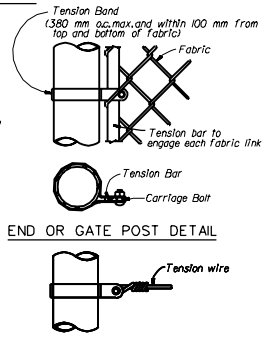

END OR GATE POST DETAIL

TENSION BAND DETAIL

FASTENING DETAILS

N.T.S.

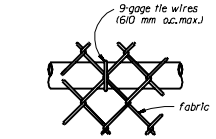

TOP OR BRACE RAIL ATTACHMENT

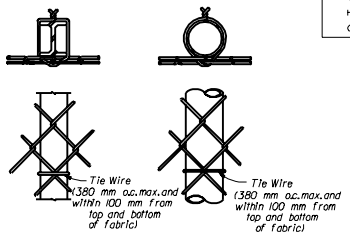

H-BEAM

ROUND POST

LINE POST ATTACHMENTS

N.T.S.

NOTES:

1. Details shown are to clarify requirements and are not intended to limit other types of fence sections and methods of installation.
2. Wire ties, rails, posts, and braces shall be constructed on the secure side of the fence alignment. Chain-link fabric shall be placed on the opposite side of the secure area.
3. C-Section posts shall be installed so that the void inside the post is completely filled with concrete up to the top of the foundation.
4. Bottom rail shall be attached to double rail ends using 10 mm carriage bolts as shown.

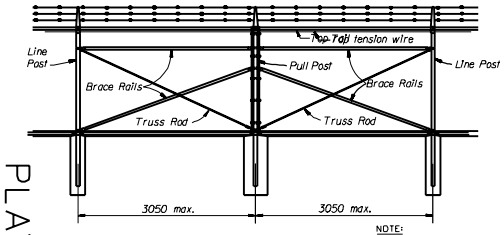

NOTE:
Provide brace panel whenever straight runs exceed 152.4 M.

BRACE PANEL DETAIL

N.T.S.

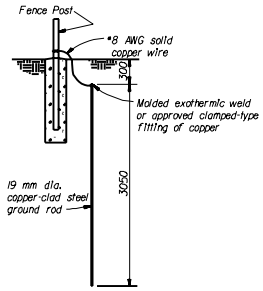

GROUNDING DETAIL

N.T.S.

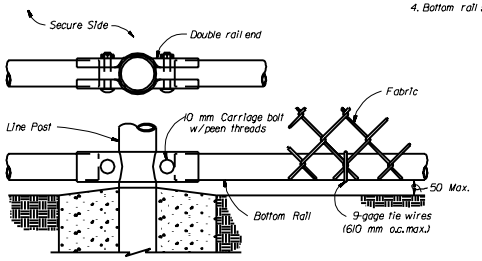

BOTTOM RAIL DETAILS

N.T.S.

CHAIN-LINK SECURITY FENCE DETAILS

PLATE C1

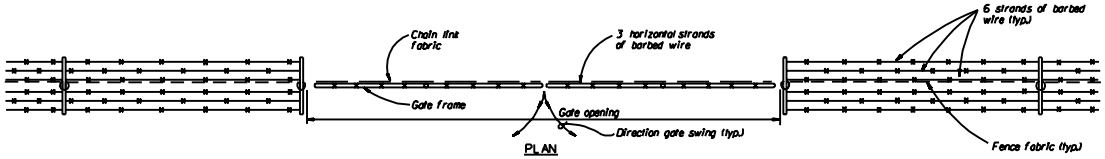

PLAN

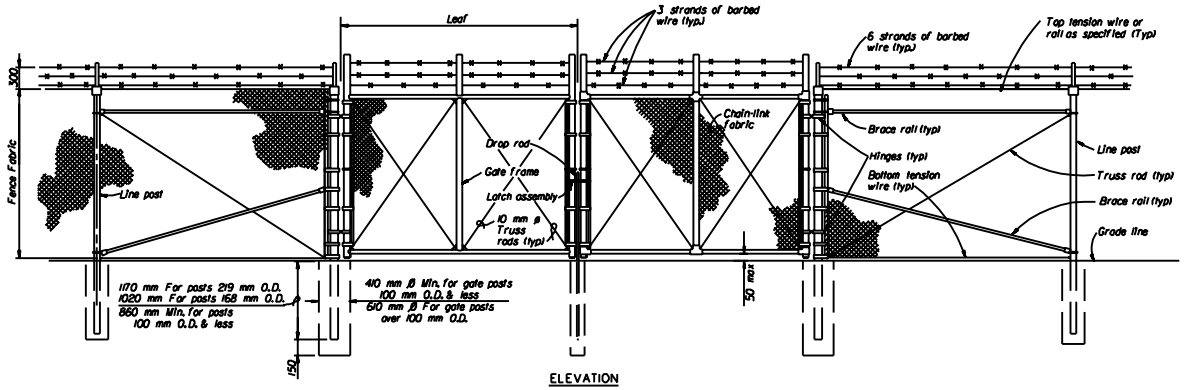

ELEVATION

DOUBLE SWING GATE (TYPE FE7 FENCE)

(FOR TYPE FE8 ADD REINFORCED BARBED TAPE)

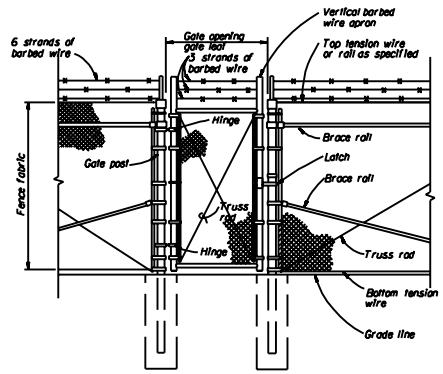

PERSONNEL GATE
TYPE FE7 FENCE

NOTES:

1. Details shown are to clarify requirements and are not intended to limit other type of fence sections and methods of installation.
2. Swing Gates shall be constructed with drop rods, padlocks, latch assembly and gate keepers except as noted.
3. All gate frames shall be a minimum 48 mm nominal (round) or 50 mm nominal (square). Gate frames shall be of welded construction or shall be assembled using heavy fittings. At Contractor's option a welded horizontal brace may be used in lieu of truss rods to brace all welded gate frames. The Contractor shall be responsible for the proper rigid construction of all gates supplied.
4. Gates shall be designated as follows:

Fence Type	:	FE5, FE6, etc.
Fence Height	:	millimeters
Type Opening	:	SO (single)
		DO (double)
Hinge	:	RA (standard)
		HO (offset)
Opening	:	mm (clear opening between gate posts)

EXAMPLES: FE6-84-DO-RA-24
FE5-48-SO-HO-6

GATE POST SCHEDULE	
GATE LEAF WIDTH (NOMINAL)	OUTSIDE DIMENSION (NOMINAL)
1830 mm or less	73 mm OD 64 mm SQ
More than 1830 mm to 3960 mm	100 mm OD
More than 3960 mm to 5490 mm	168 mm OD
More than 5490 mm	219 mm OD

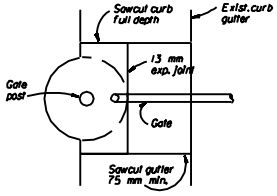

PLAN

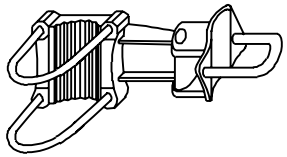

OFFSET HINGE

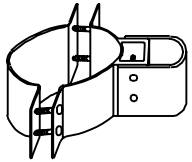

STANDARD HINGE

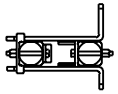

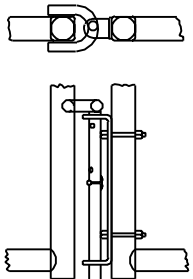

LATCH ASSEMBLY

DROP ROD ASSEMBLY

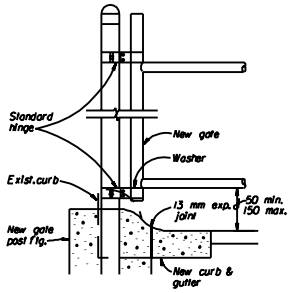

SECTION
GATE POST DETAIL
AT CURB AND GUTTER
N.T.S.

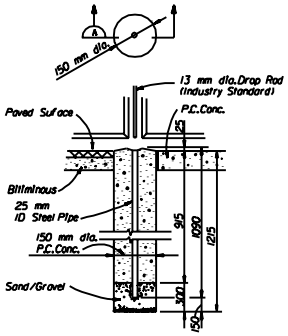

DROP ROD FOUNDATION

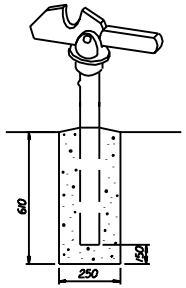

GATE KEEPER
(TO HOLD GATE OPEN)

SWING GATE DETAILS
N.T.S.

CHAIN - LINK FENCE GATE DETAILS

PLATE C2

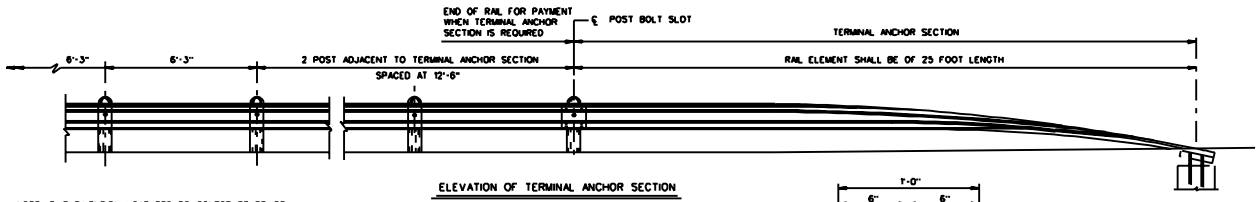

*NOTE: THIS DIMENSION MEASURED TO CENTER OF SPLICE WHEN TERMINAL CONNECTOR IS USED.

ELEVATION OF TERMINAL ANCHOR SECTION

TERMINAL ANCHOR SECTION SHALL CONSIST OF A TERMINAL ANCHOR POST AND ONE 25 FOOT RAIL ELEMENT AND WILL BE REQUIRED ONLY AT LOCATIONS SPECIFIED ELSWHERE ON THE PLANS.

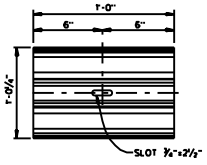

BACK-UP PLATE

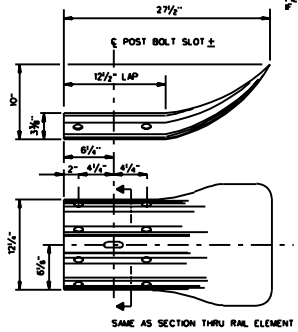

TERMINAL SECTION

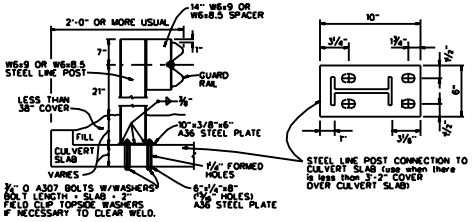

LOW FILL CULVERT

POST MOUNTING

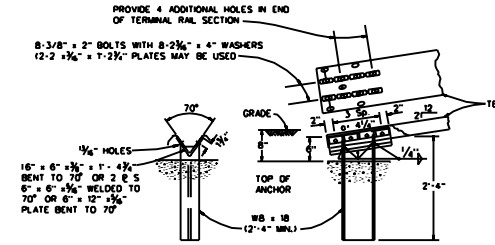

TERMINAL ANCHOR POST

NOTE: THIS POST REQUIRES 4 ADDITIONAL HOLES (SHOP OR FIELD) IN THE TERMINAL RAIL MEMBER WITH 8-5/8" BOLTS AND WASHER PLATES AS SHOWN FOR ATTACHMENT.

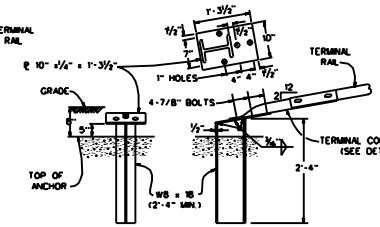

OPTIONAL TERMINAL ANCHOR POST

NOTE: THIS OPTIONAL POST REQUIRES THE USE OF THE 1 GA. TERMINAL CONNECTOR WITH 4-7/8" BOLTS FOR ATTACHMENT TO THE ANCHOR POST.

GENERAL NOTES

1. THE EXACT POSITION OF GUARD FENCE SHALL BE AS SHOWN ELSEWHERE ON THE PLANS AS DIRECTED BY THE ENGINEER. GUARD FENCE SHALL BE TRANSITIONED TO A SMOOTH CONNECTION WITH OTHER GUARD FENCE OR STRUCTURE RAILING AS SHOWN ELSEWHERE ON PLANS.
2. AT THE OPTION OF THE CONTRACTOR THE RAIL ELEMENTS FOR GUARD FENCE MAY BE FURNISHED IN EITHER 12½OR 25 FOOT NOMINAL LENGTHS WITH POSTS BOLT SLOTS FOR CONNECTION TO POSTS.
3. BOLTS SHALL BE OF SUFFICIENT LENGTH TO EXTEND THROUGH THE FULL THICKNESS OF THE NUT AND NO MORE THAN ¼" BEYOND IT.
4. THE TOP OF THE TERMINAL ANCHOR POSTS AND ALL STEEL FITTINGS THEREON SHALL BE GALVANIZED A MINIMUM OF 10" AS SHOWN.
5. WHERE SOLID ROCK IS ENCOUNTERED OR WHERE SHOWN ON THE PLANS, THE DIAMETER OF THE HOLES SHALL BE APPROXIMATELY 12 INCHES, THE BACKFILL SHALL BE WITH A CONSCIENTIOUS MATERIAL, AND EMBEDMENT DEPTH SHALL BE 1'-6" OR MORE AS DIRECTED BY THE ENGINEER. TIMBER POSTS SHALL NOT BE SET IN CONCRETE.
6. THE TERMINAL ANCHOR POST SHALL BE SET IN CLASS "A", "B" OR "C" CONCRETE IN ACCORDANCE WITH ITEM "CONCRETE FOR STRUCTURES", OR SET IN CONCRETE IN ACCORDANCE WITH ITEM "CONCRETE PAVEMENT". CONCRETE SHALL BE SUBSIDIARY TO THE BID ITEM REQUIRING CONSTRUCTION OF THE TERMINAL RAIL SECTION AND ANCHORAGE SYSTEM.
7. TIMBER POSTS MAY BE BEVELED AT APPROXIMATELY 10 DEGREES ON THE TOP OR BOTH ENDS WITH HIGH SIDE TOP OF POST PLACED TOWARD THE ROADWAY OR THEY MAY BE DOWED WHEN "BLOCKED OUT". THE UPPER PORTION OF THE POST SHALL BE NOTCHED ½" TO PROVIDE FLAT SURFACE FOR TIMBER SPACER. A TOLERANCE OF - ⅛" WILL BE PERMITTED ON THE NOTCHED PORTION OF THE POST.
8. AN ANCHOR OTHER THAN A TERMINAL ANCHOR POST SHALL CONSIST OF A CONNECTION SIMILAR TO THE RAIL SPLICE OR SIMILAR TO THE TERMINAL CONNECTOR.
9. SPECIAL FABRICATION WILL BE REQUIRED IN INSTALLATIONS HAVING A CURVATURE OF LESS THAN 150 RADIUS.
10. POST SPACING WILL BE 6'-3" EXCEPT THAT THE FIRST POST WILL BE 25' FROM THE TERMINAL ANCHOR POST AND THE NEXT TWO POSTS SPACED AT 12'-6" WITH A MINIMUM OF 8 POSTS ADJACENT TO STRUCTURES SPACED AT 3'-1½".
11. THE 10 GAGE TERMINAL CONNECTORS MUST BE USED WITH THE OPTIONAL TERMINAL ANCHOR POST. EITHER ANCHOR POST MAY BE USED WITH EITHER CONCRETE ANCHOR.
12. CROWN WILL BE WIDENED TO ACCOMODATE GUARD FENCE.
13. STEEL POSTS SHALL BE BLOCKED OUT. A W6x8.5 OR W6x9.0 STEEL SPACER SHALL BE USED WITH STEEL POSTS. BACK-UP PLATES SHALL BE PROVIDED AT INTERMEDIATE (NON-SPLICE) STEEL POSTS.
14. WHEN BLOCKOUT GUARD FENCE IS SPECIFIED ELSEWHERE IN THE PLANS, A 6x8x14" TREATED TIMBER SPACER OF YELLOW PINE SHALL BE USED WITH WOOD POSTS.
15. UNLESS OTHERWISE SHOWN IN THE PLANS, GUARD FENCE PLACED IN THE VICINITY OF CURBS SHALL BE BLOCKED OUT SO THAT THE FACE OF CURB IS LOCATED DIRECTLY BELOW OR BEHIND THE FACE OF RAIL. RAIL PLACED OVER CURBS SHALL BE INSTALLED SO THAT THE POST BOLT IS LOCATED APPROXIMATELY 21-INCHES ABOVE THE GUTTER PAN OR ROADWAY SURFACE.
16. WELDED STEEL POST AND SPACERS SHALL MEET THE REQUIREMENTS OF ASTM A-569. THE FLANGE WIDTH AND THICKNESS, WEB THICKNESS, AND DEPTH OF WELDED POSTS AND SPACERS SHALL EQUAL OR EXCEED THE DIMENSIONS OF A STANDARD ROLLED W6x8.5.
17. STEEL POSTS AND SPACERS SHALL MEET THE REQUIREMENTS OF ASTM A-36. BOLT HOLES SHALL BE APPROXIMATELY CENTERED BETWEEN WEB AND EDGE OF FLANGE OF SPACERS AND POSTS.
18. UNLESS OTHERWISE SHOWN IN THE PLANS, MBGF SHALL BE PLACED WITH THE FACE OF RAIL DIRECTLY ABOVE THE SHOULDER EDGE (OR CURB FACE) EXCEPT THE 25' TERMINAL ANCHOR SECTION AND ADJACENT 25' OF MBGF SHALL BE FLARED AT 25:1 (LONGITUDINAL LATERAL) TO PROVIDE A 2' OFFSET BETWEEN BURIED ANCHOR AND SHOULDER EDGE (OR CURB FACE). FLARING THE 25' TERMINAL ANCHOR AND ADJACENT 25' MBGF IS OPTIONAL FOR ONE-WAY TRAFFIC CONDITIONS ON THE DOWNSTREAM END OF GUARD FENCE.
19. WASHERS USED WITH THE EIGHT ⅝" SPLICE BOLTS AND NUTS THAT ARE PROVIDED FOR TERMINAL CONNECTIONS AND OR TERMINAL ANCHOR POSTS SHALL BE 1½"x3"x⅜", OR 1" I.D. AND 2" O.D.x0.134" (ANSI B27.2) NARROW TYPE A PLAIN WASHERS.
20. BACK-UP PLATES SHALL CONFORM TO THE MATERIALS AND GALVANIZING REQUIREMENTS SPECIFIED FOR THE RAIL ELEMENT, AND SHALL BE THE SAME NOMINAL THICKNESS AS THE RAIL ELEMENT USED.

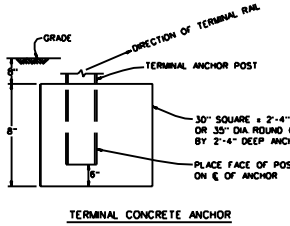

TERMINAL CONCRETE ANCHOR

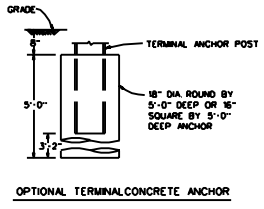

OPTIONAL TERMINAL CONCRETE ANCHOR

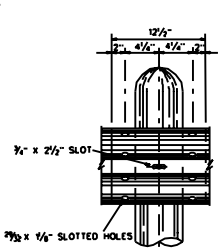

RAIL SPLICE

NOT TO SCALE

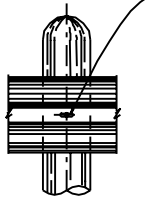

INTERMEDIATE POST CONNECTION

NOT TO SCALE

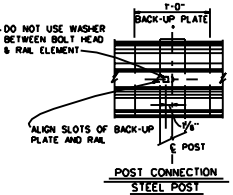

POST CONNECTION

STEEL POST

NOT TO SCALE

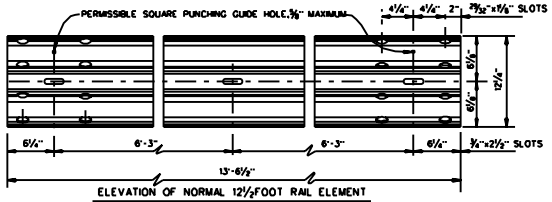

ELEVATION OF NORMAL 12½FOOT RAIL ELEMENT

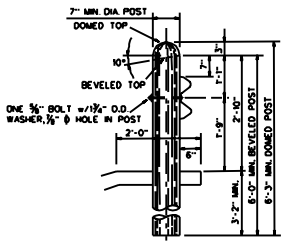

WOOD LINE POST DETAIL

NOT TO SCALE

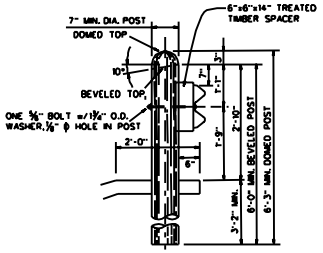

WOOD LINE POST DETAIL

(BLOCKOUT)

NOT TO SCALE

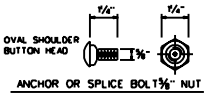

ANCHOR OR SPLICE BOLT ⅝" NUT

POST BOLT: SIMILAR EXCEPT LENGTH

(⅞" HEX BOLTS REQUIRED FOR TERMINAL CONNECTOR)

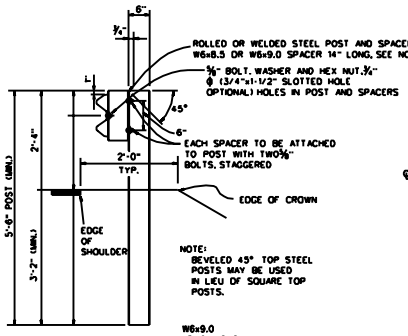

STEEL LINE POST

(BLOCKOUT)

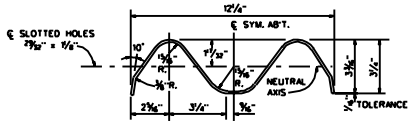

NOTE: ACTUAL SECTION MAY BE USED SLIGHTLY DIFFERENT DEPENDING UPON THE MANUFACTURER.

SECTION THRU GUARD RAIL

METAL BEAM GUARD FENCE DETAILS

PLATE C3

PLANT LEGEND										
KEY	COMMON NAME	SCIENTIFIC NAME	REMARKS	MIN. HEIGHT	CALIPER OR SPREAD	B & B OR B/B C	MIN. ROOT SPREAD OR BALL DIMENSIONS		MIN. PIT SIZE	
							DEPTH	DIA.	DEPTH	DIA.

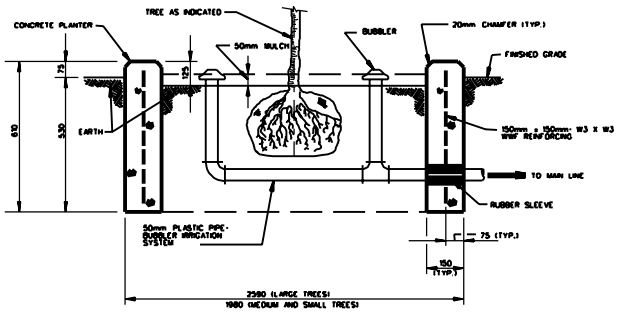

TREE WELL DETAIL (TYPICAL) WITH BUBBLERS (2 EACH)

NOT TO SCALE

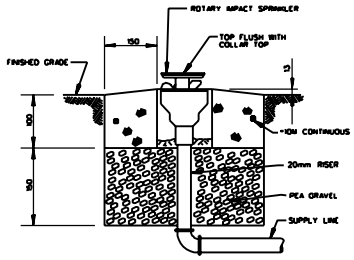

NOTE:
CONCRETE COLLARS FOR ROTARY SPRINKLERS LOCATED IN LAWN AREAS.

IRRIGATION SPRINKLER COLLAR SECTION

NOT TO SCALE

NOTES:

1. B & B DENOTES BALLED AND BURLAPPED.
2. C DENOTES CONTAINER - 15 LITER UNLESS OTHERWISE NOTED.
3. PB DENOTES PLANT BED.
4. TREES WILL NOT BE PLANTED UNDER OVERHEAD ELECT. LINES OR IN DITCHES.
5. CONTRACTOR WILL EXAMINE UTILITY PLANS AND AVOID UTILITIES.
6. NUMBER OF PLANTS & SPACINGS WILL DEPEND ON SIZE OF PLANTING AREA.
7. ONLY TOPSOIL FREE FROM NOXIOUS PLANTS EXCAVATED FROM PITS AND BEDS WILL BE ACCEPTABLE FOR USE AS BACKFILL MATERIAL. (SEE SPECIFICATIONS).
8. SMALL TREES DO NOT REQUIRE STAKING.
9. ALL DIMENSIONS ARE IN MILLIMETERS UNLESS OTHERWISE SHOWN.

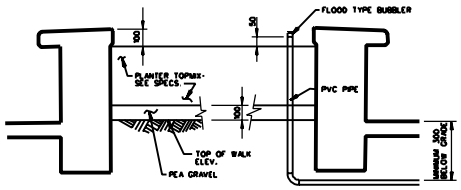

RAISED PLANTER DETAIL

NOT TO SCALE

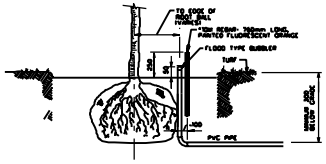

BUBBLER IRRIGATION DETAIL

NOT TO SCALE

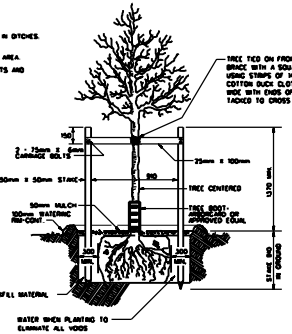

SECTION: PLANTING AND STAKING TREES

NOT TO SCALE

LANDSCAPE LEGEND

	NEW	EXISTING
TREE		
GROUP OF SHRUBS OR VINES		

KEY TO PLANT DESIGNATIONS

3 BAM 1220mm O.C.

SPACING OF PLANTS, CENTER TO CENTER
VARIETY OF PLANT (SEE PLANT LEGEND)
NO. OF PLANTS REQUIRED

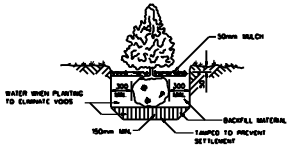

BALLED & BURLAPPED SHRUBS

NOT TO SCALE

(ALSO APPLIES TO SHRUB CONTAINERS)

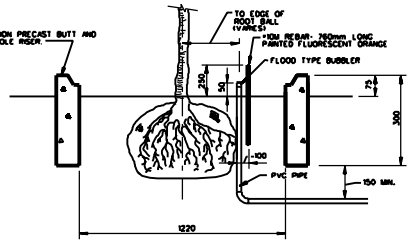

NOTE:
THIS DETAIL CAN BE USED WITH OR WITHOUT PERIMETER GRADE

TREE RING WITH BUBBLER IRRIGATION DETAILS

NOT TO SCALE

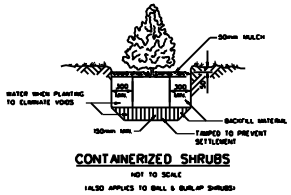

CONTAINERIZED SHRUBS

NOT TO SCALE

(ALSO APPLIES TO BALL & BURLAP SHRUBS)

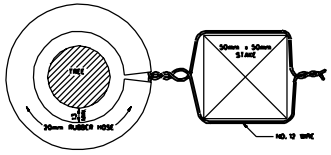

PLAN

DETAIL SHOWING TYING OF TREE TO SINGLE STAKE

NOT TO SCALE

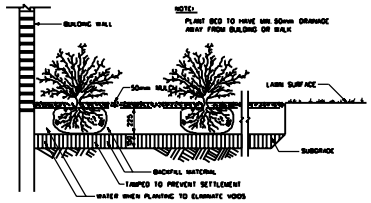

NOTE:
PLANT BED TO HAVE MIN. 50mm DRAINAGE AWAY FROM BUILDING OR WALK

TYPICAL PLANTING BED FOR GROUND COVERS

NOT TO SCALE

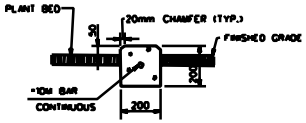

200mm CONCRETE MOWSTRIP (C.M.S.)

NOT TO SCALE

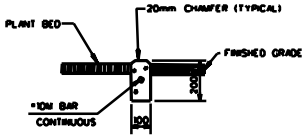

CONCRETE MOWSTRIP

NOT TO SCALE

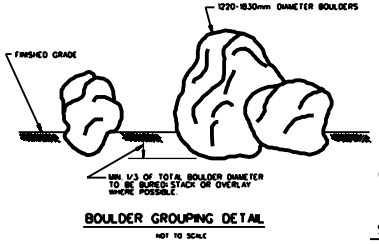

BOULDER GROUPING DETAIL

NOT TO SCALE

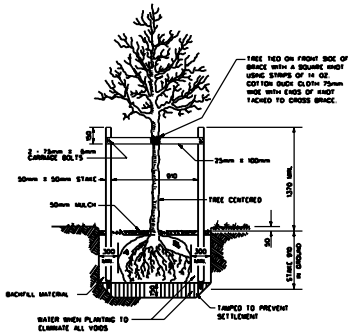

SECTION STAKING BALLED & BURLAPPED TREES

NOT TO SCALE

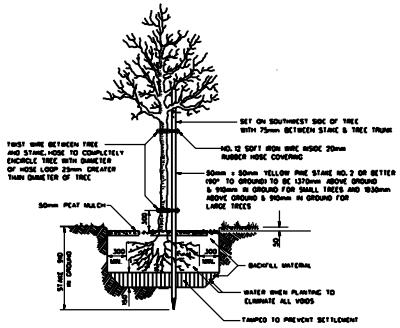

SECTION STAKING BAREROOT TREES

NOT TO SCALE

LANDSCAPE DETAILS

PLATE C4

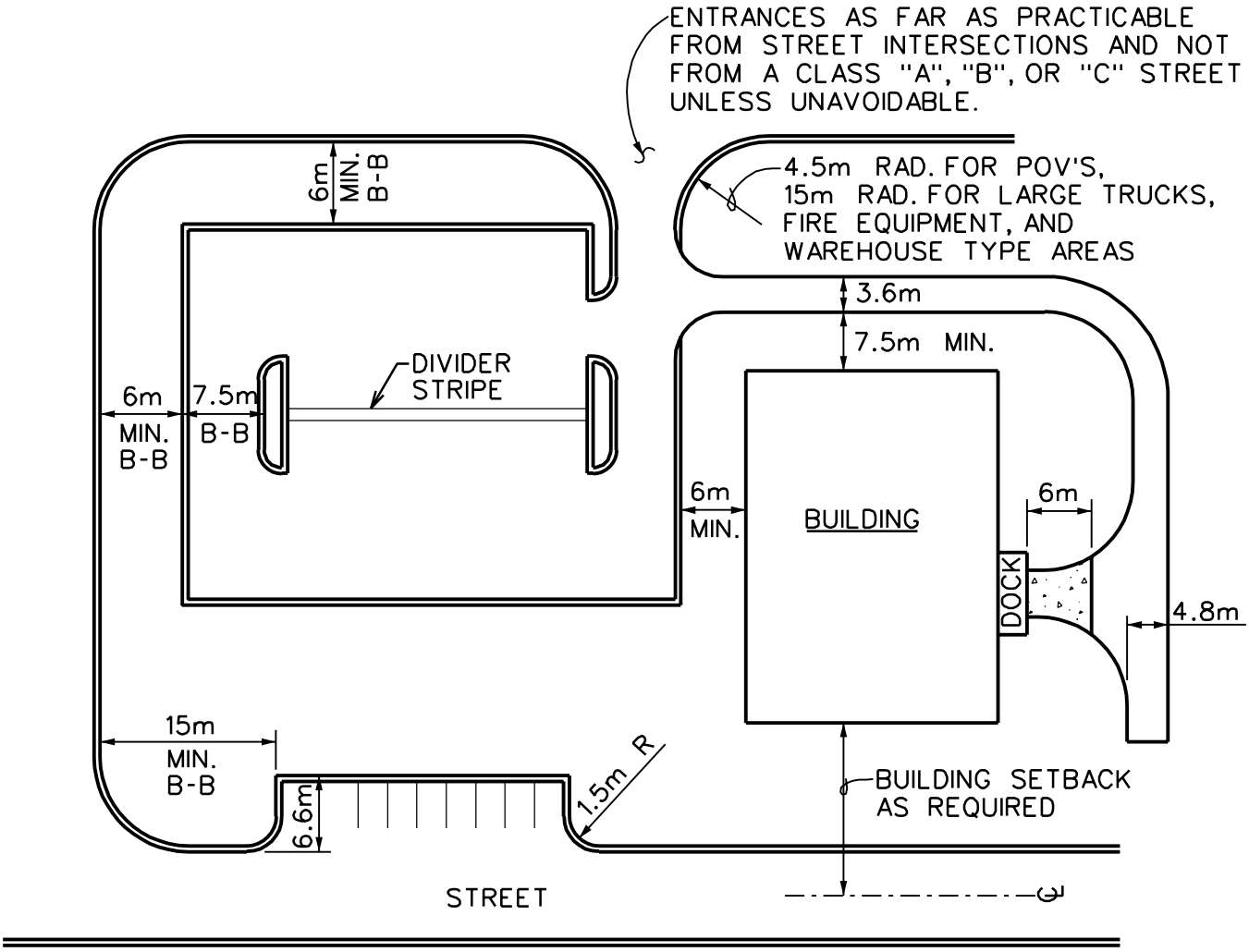

PARKING AREA AND DRIVE DISTANCES FROM STREETS, INTERSECTIONS, AND BUILDINGS

N.T.S.

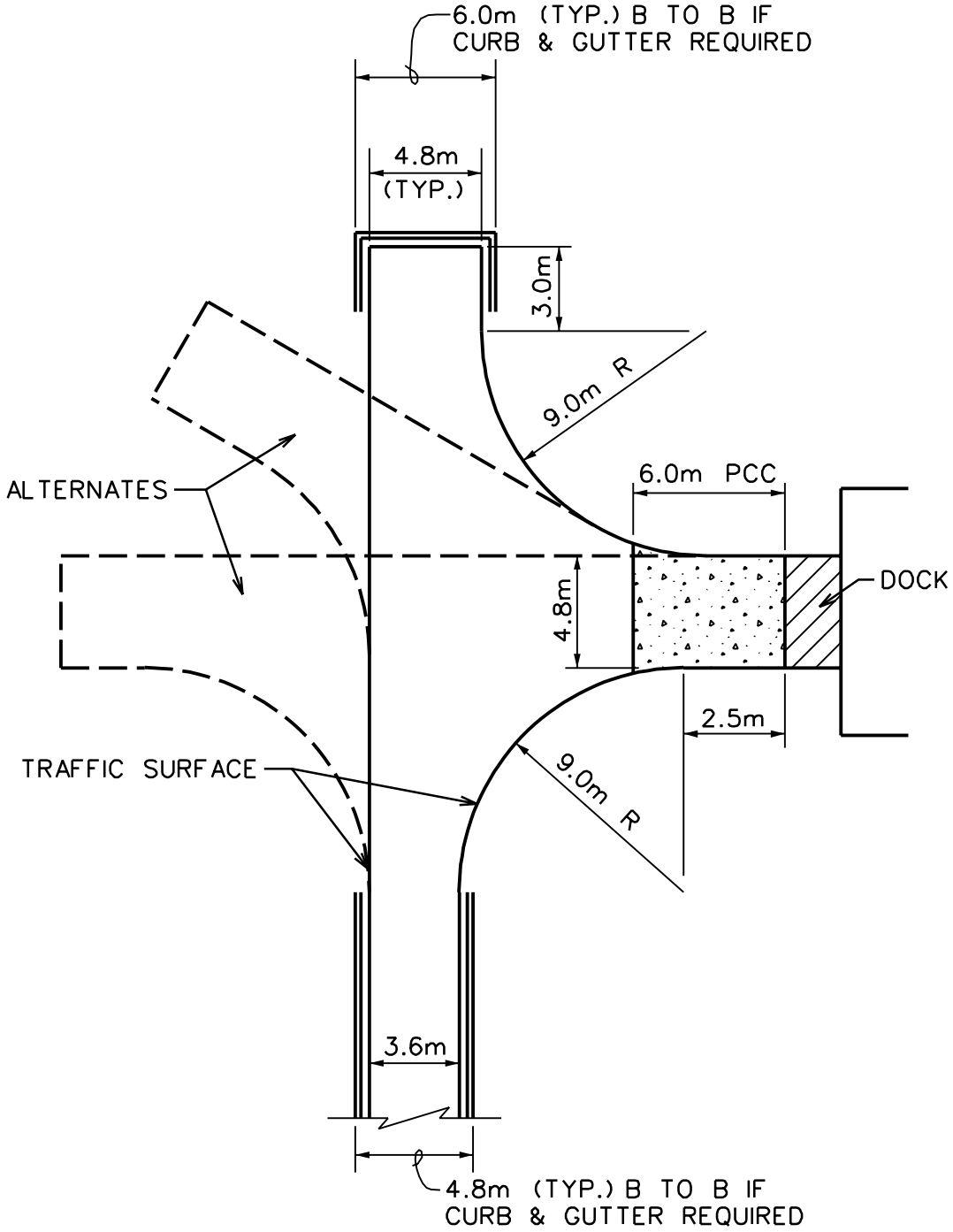

NOTE TO DESIGNER:

THIS DETAIL SHOULD BE USED FOR MEDIUM-SIZED TRUCKS (SU), MODIFY FOR LARGE TRUCKS AND SEMI-TRAILERS.

TYPICAL SERVICE DRIVE TURN-AROUND

N.T.S

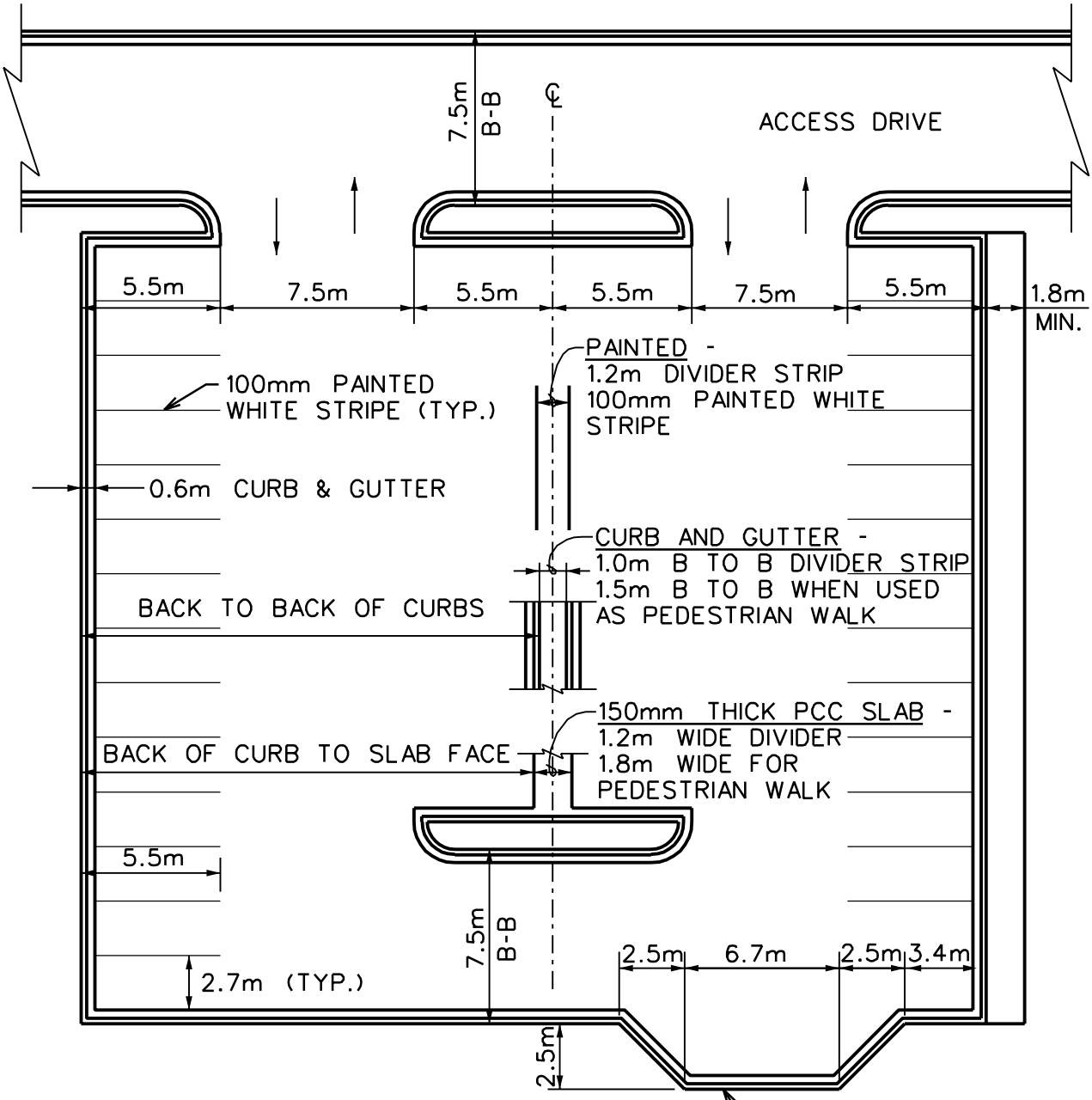

NOTE TO DESIGNER:

SEE DESIGN NOTES, PLATE C-8 FOR GENERAL NOTES AND CRITERIA PERTAINING TO END ISLANDS AND DIVIDERS.

P.O.V. PARKING AREA

LAYOUT STANDARDS

N.T.S

P.O.V. PARKING AREAS

NOTES TO DESIGNER:

1. PARKING AT ARMY INSTALLATIONS SHALL BE 90° UNLESS DIRECTED OTHERWISE. PARKING AT AIR FORCE FACILITIES WILL BE 90°, EXCEPT THAT 60° PARKING MAY BE USED WHEN A HIGH IN-OUT RATE IS ANTICIPATED AND ONE WAY MOVEMENT CAN BE DESIGNED INTO THE OVERALL LAYOUT.

2. WHEN LANDSCAPING IS TO BE INCLUDED IN LOT, USE END ISLANDS AS DETAILED ON PLATE C9.

3. WHEN LANDSCAPING IS NOT TO BE PROVIDED, USE END ISLANDS AS DETAILED ON PLATE C10.

4. PAINTED DIVIDER STRIPS SHALL BE USED EXCEPT WHEN STORM DRAINAGE, TRAFFIC CONTROL, OR LANSCAPING CONSIDERATIONS INDICATE A NECESSITY FOR RAISED DIVIDERS.

5. STRIPING BETWEEN HANDICAP PARKING SPACES SHALL CONSIST OF 2 - 100mm PAINTED STRIPES 1.5m ON CENTER WITH 100mm WIDE DIAGONAL STRIPES 1.0m ON CENTERS.

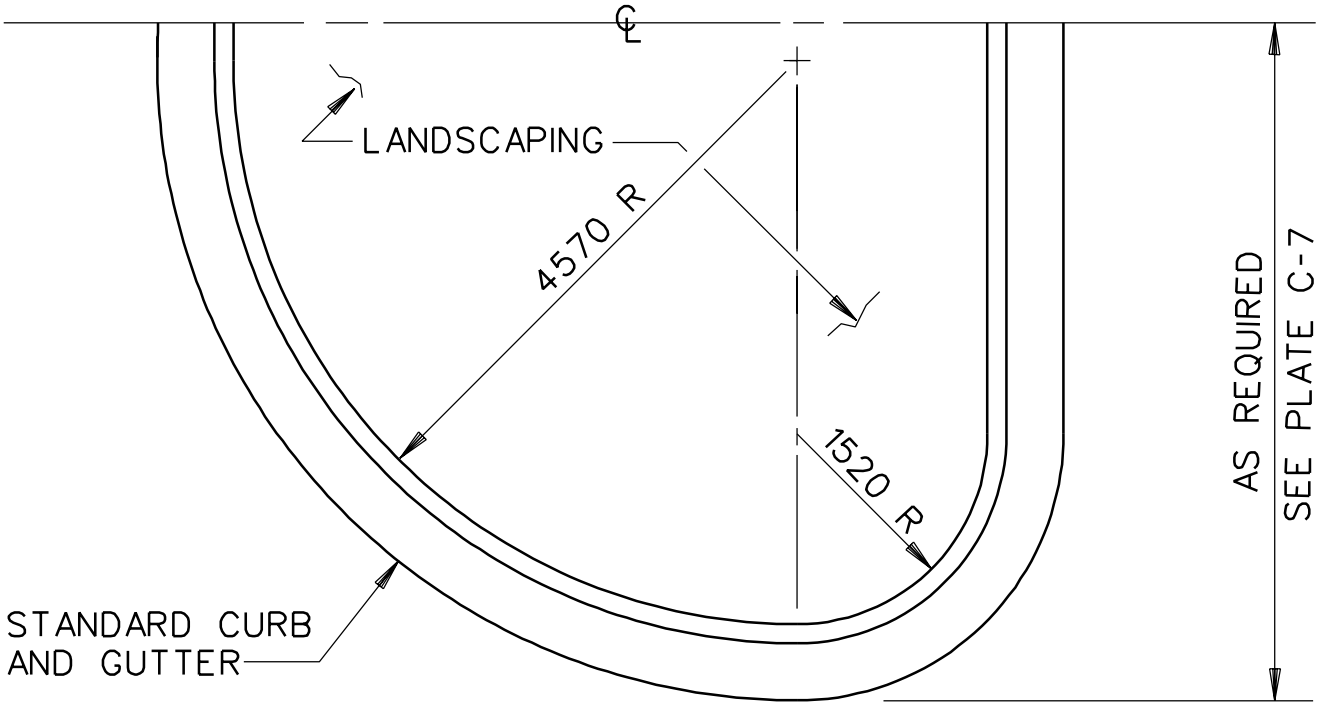

PLAN

END ISLAND DETAIL 1

(WITH LANDSCAPING)
N.T.S.

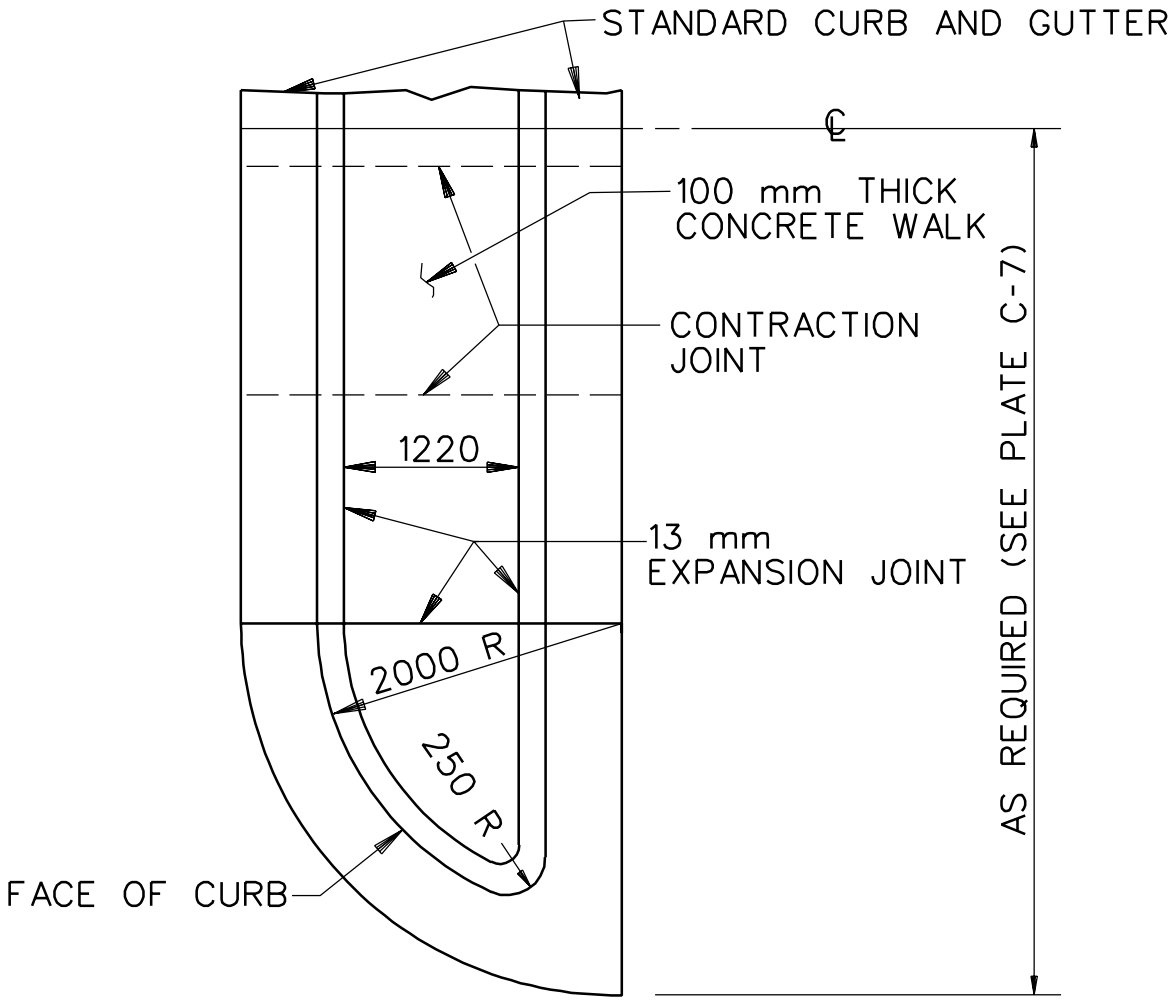

PLAN

END ISLAND DETAIL II

(WITHOUT LANDSCAPING)

N.T.S.

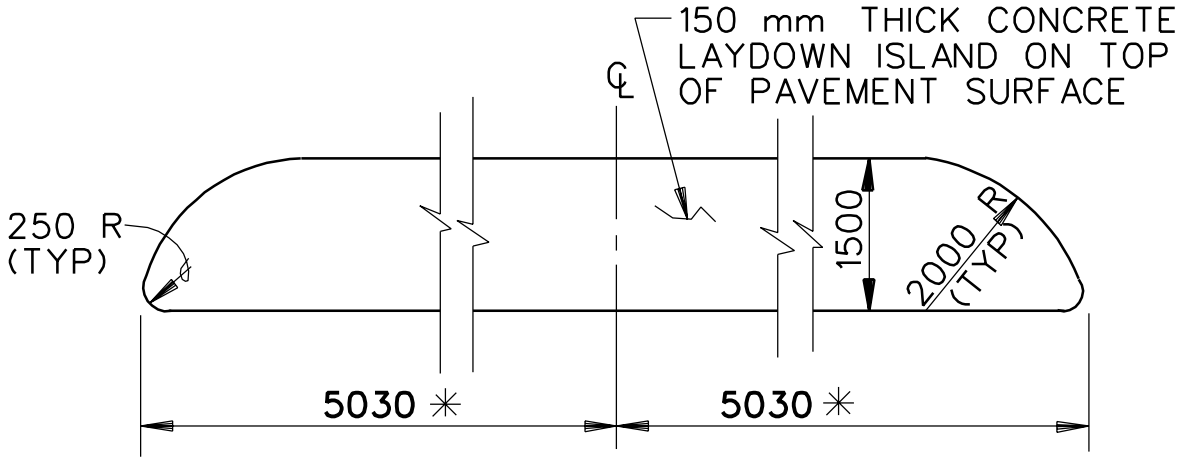

PLAN

✳ DIMENSION SHOWN APPLIES TO ARMY PROJECTS.
FOR AIR FORCE PROJECTS, INCREASE 300 mm, TO 5330 mm.

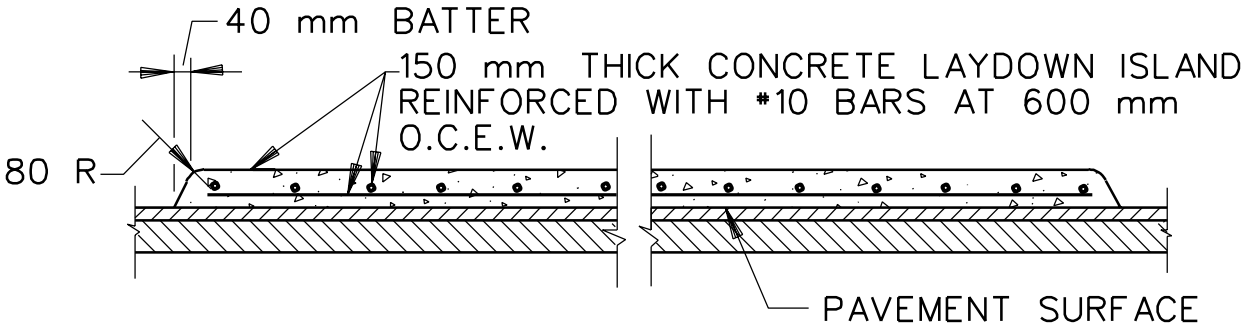

SECTION

NOTE: ANCHOR TO PAVEMENT WITH 4-#16 BARS 460 mm LONG, EQUALLY SPACED. MIN. COVER OVER ANCHOR BARS 50 mm.

END ISLAND DETAIL III

N.T.S.

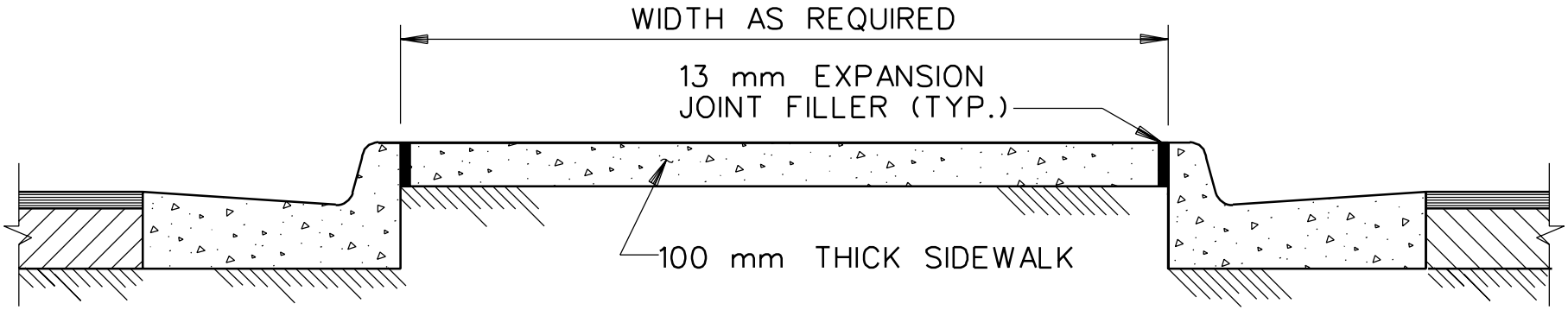

CURB AND GUTTER

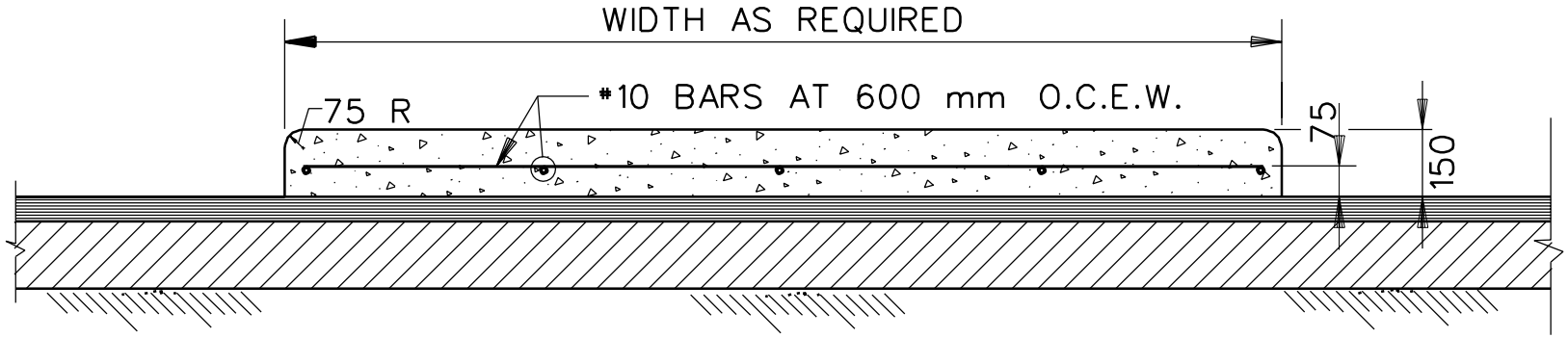

OVERLAY TYPE

NOTE: ANCHOR TO PAVEMENT WITH #16 BARS 460 mm LONG, AT MAXIMUM SPACING OF 3000 mm O.C. MIN. COVER OVER ANCHOR BARS 50 mm.

TYPICAL SECTION OF DIVIDER STRIPS

N.T.S.

PLATE C12

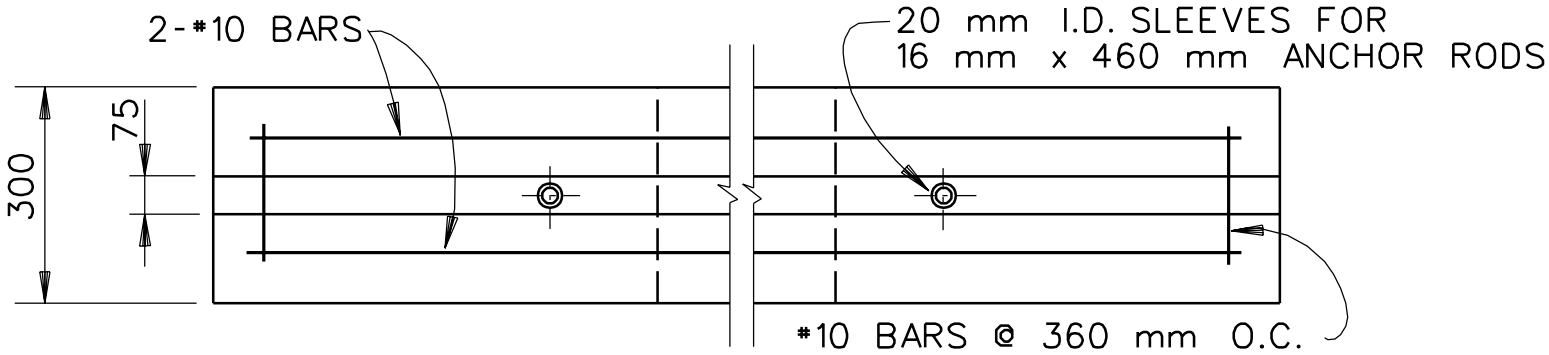

PLAN

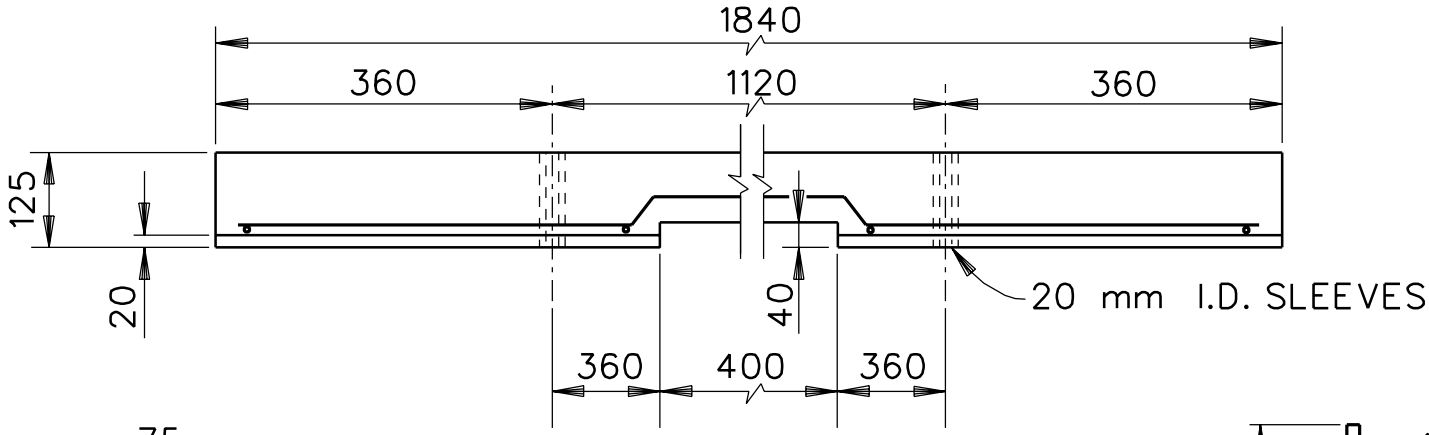

ELEVATION

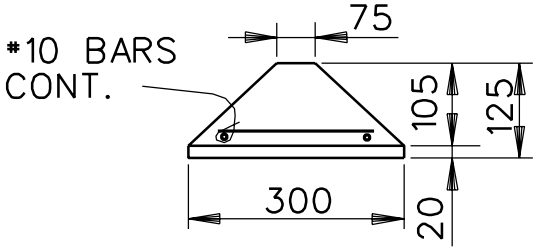

END VIEW

NOTE:

APPROVED STANDARD MANUFACTURED WHEEL STOP MAY BE USED

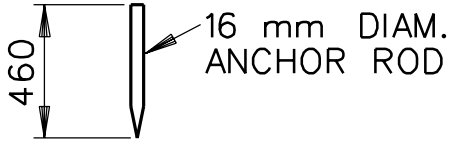

ANCHOR ROD

WHEEL STOP DETAILS

N.T.S.

PLATE C13

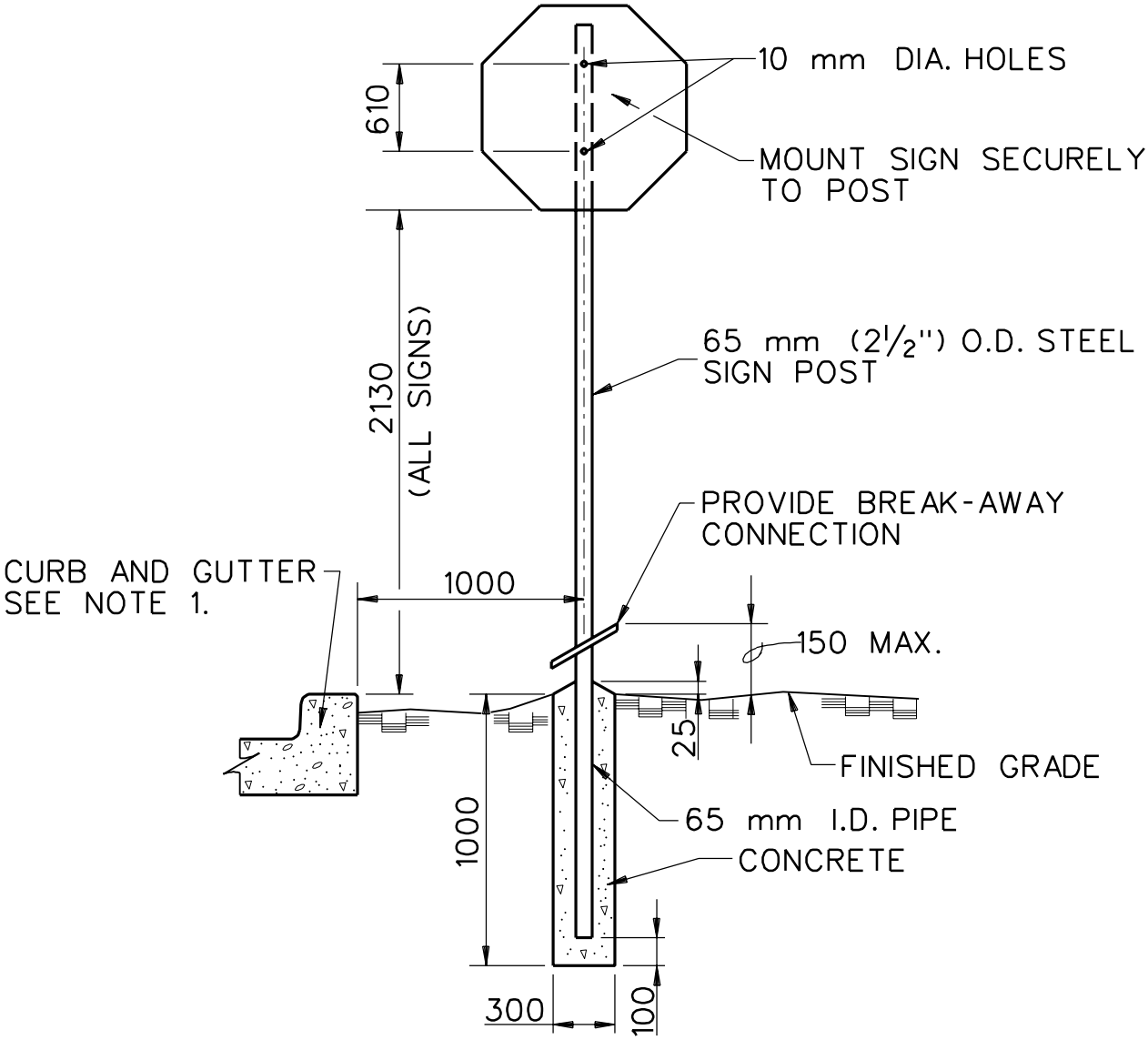

TRAFFIC SIGN MOUNTING DETAILS

N.T.S

NOTES TO DESIGNER:

1. WHEN CURB AND GUTTER IS NOT PRESENT, ℄ OF POST SHALL BE SET 2100 mm FROM EDGE OF PAVEMENT.
2. REGULATORY SIGNS AT PARKING AREAS (HANDICAPPED PARKING, ETC.) SHALL BE LOCATED 300 mm BEYOND THE SIDEWALK ABUTTING THE CURB.
3. ALL SIGNS SHALL CONFORM TO THE MANUAL ON UNIFORM TRAFFIC CONTROL DEVICES (DEPT. OF TRANSPORTATION).

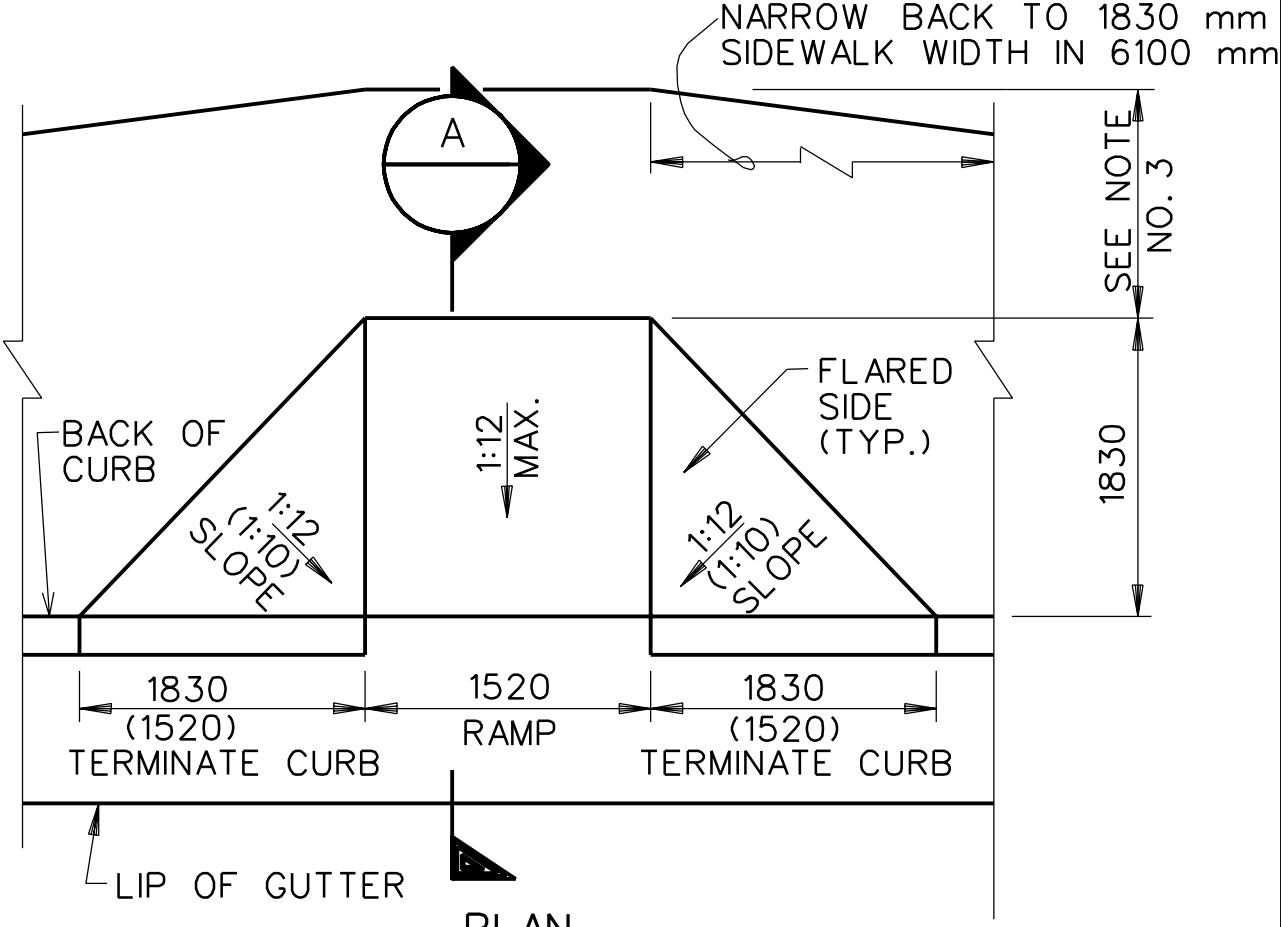

PLAN

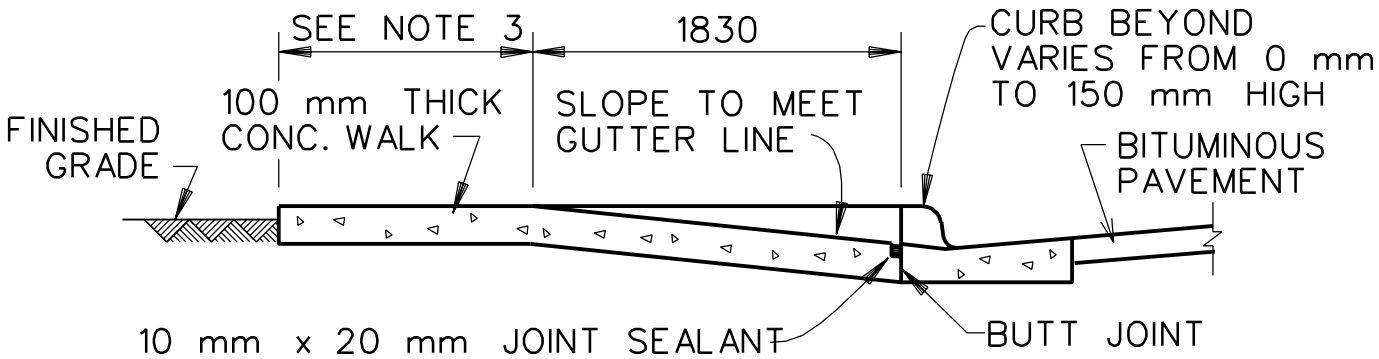

SECTION A

HANDICAPPED CURB - RAMP DETAIL

N.T.S.

NOTES TO DESIGNER:

1. CONTRACTION JOINTS ARE NOT SHOWN FOR CLARITY.
2. SEE UNIFORM FEDERAL ACCESSIBILITY STANDARDS AND ADA GUIDELINES FOR COMPLETE HANDICAPPED CRITERIA.
3. IF LESS THAN 1220 mm, FLARED SLOPE SHALL NOT EXCEED 1:12. IF 1220 mm OR GREATER, FLARED SLOPE SHALL NOT EXCEED 1:10.

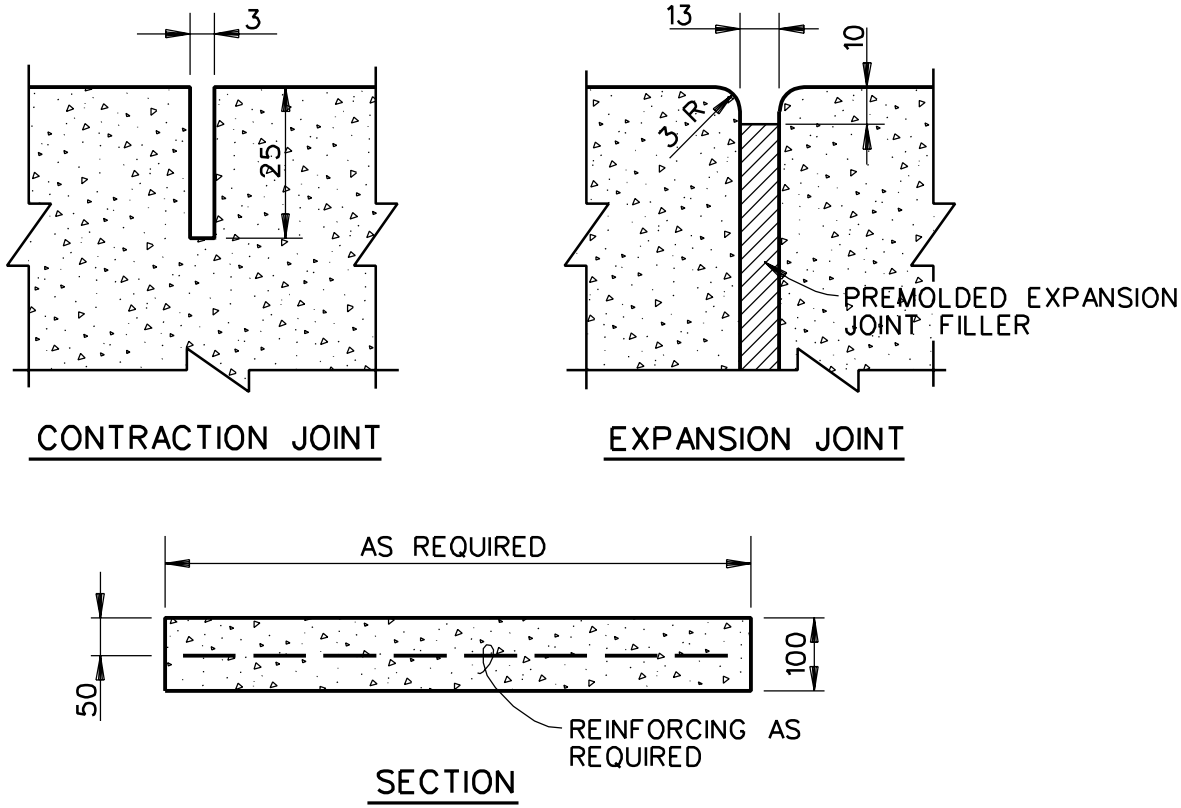

SIDEWALK DETAILS

N.T.S.

NOTES TO DESIGNER:

1. SIDEWALK REINFORCING SHALL BE 150 mm x 150 mm (6 inch x 6 inch) - W3 x W3 WELDED WIRE MESH. REINFORCING SHALL BE PROVIDED IN SIDEWALKS AT ALL ARMY INSTALLATIONS, ALL PROJECTS IN THE SAN ANTONIO AREA, AND AT SHEPPARD AIR FORCE BASE.
2. PROVIDE TRANSVERSE CONTRACTION JOINTS AT INTERVALS NOT EXCEEDING 1500 mm ON CENTER. PROVIDE CENTERLINE CONTRACTION JOINTS IN SIDEWALKS WIDER THAN 2500 mm. SPACING OF CENTERLINE CONTRACTION JOINTS SHALL NOT EXCEED 1830 mm.
3. PROVIDE EXPANSION JOINTS AT INTERVALS NOT EXCEEDING 12000 mm ON CENTER WHERE WALK DOES NOT ABUT CURB.

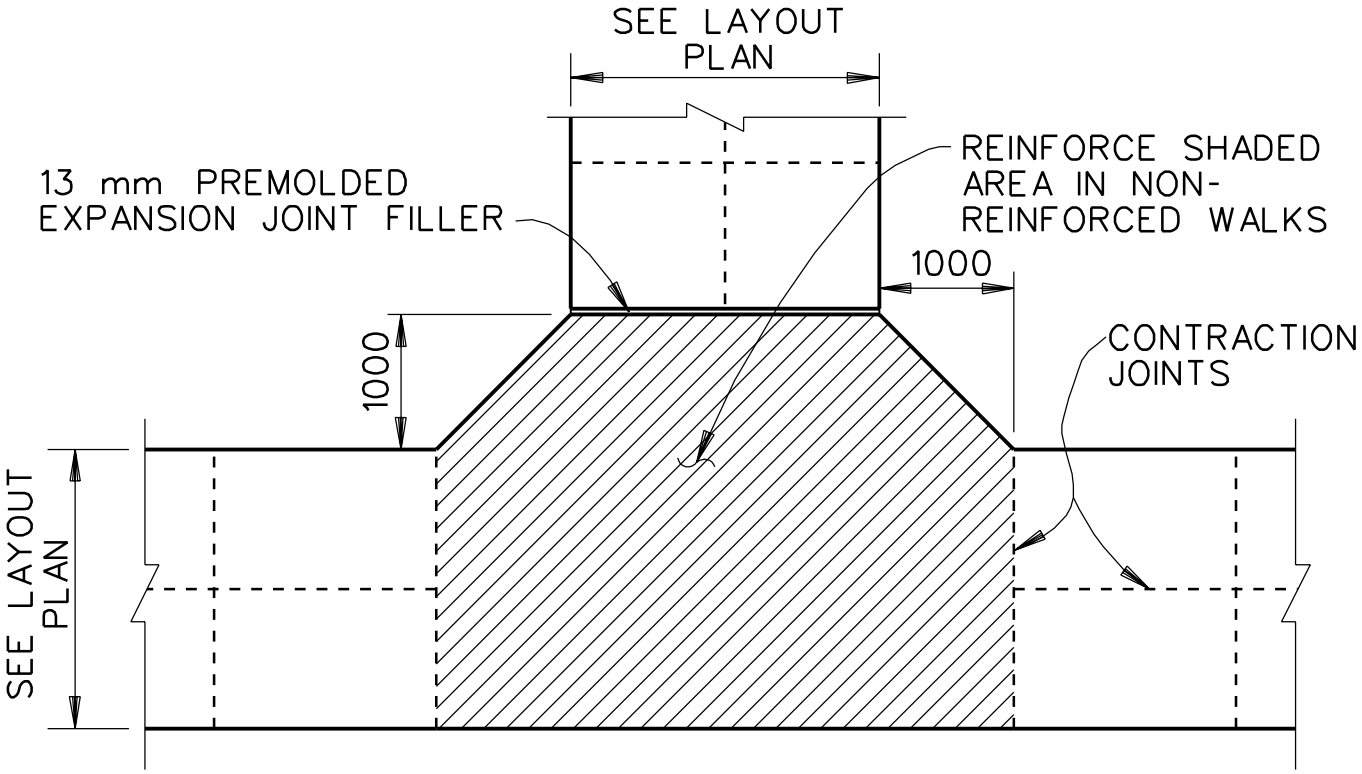

TEE INTERSECTION

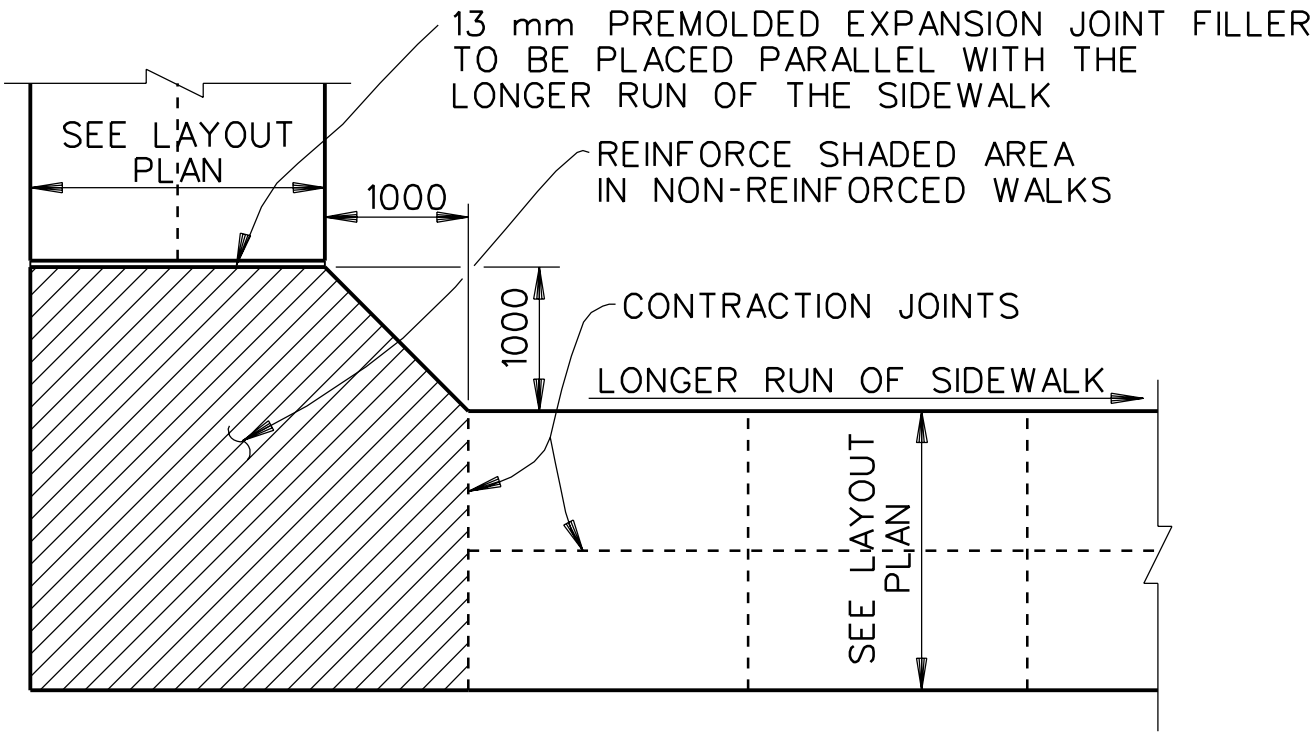

EL INTERSECTION

CONCRETE SIDEWALK INTERSECTION DETAILS

N.T.S.

PLATE C17

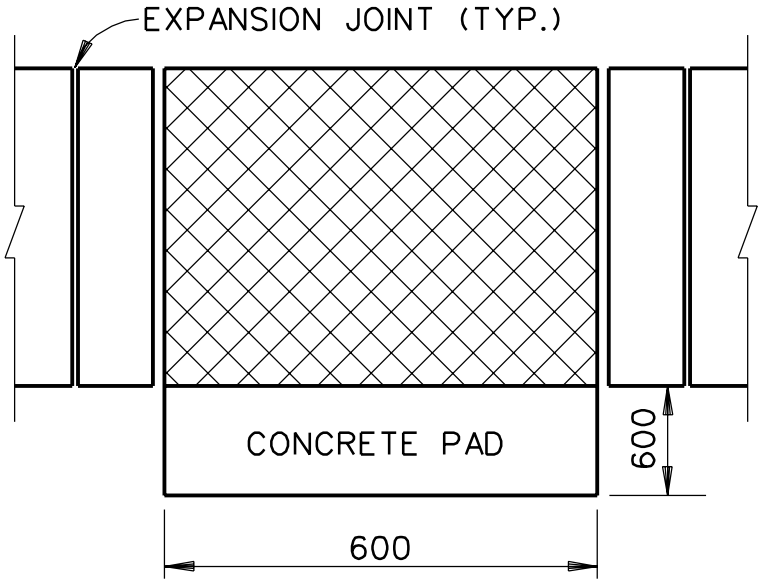

HALF PLAN

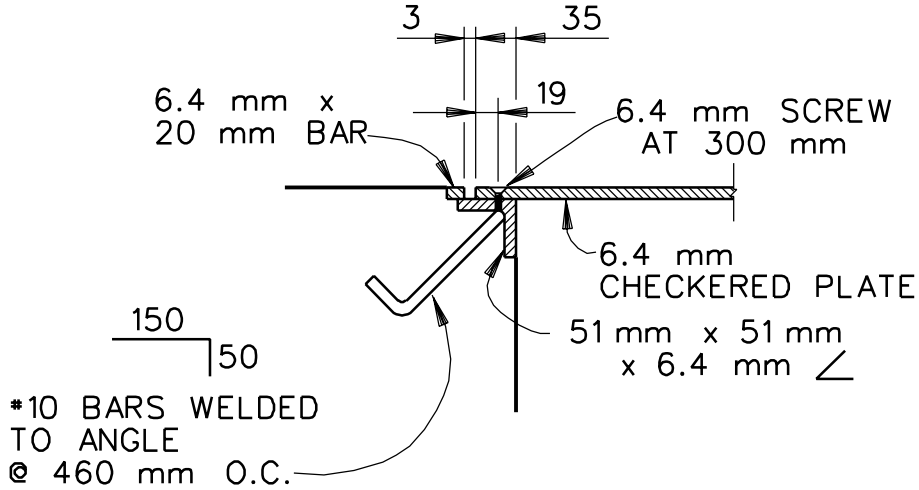

DETAIL "C"

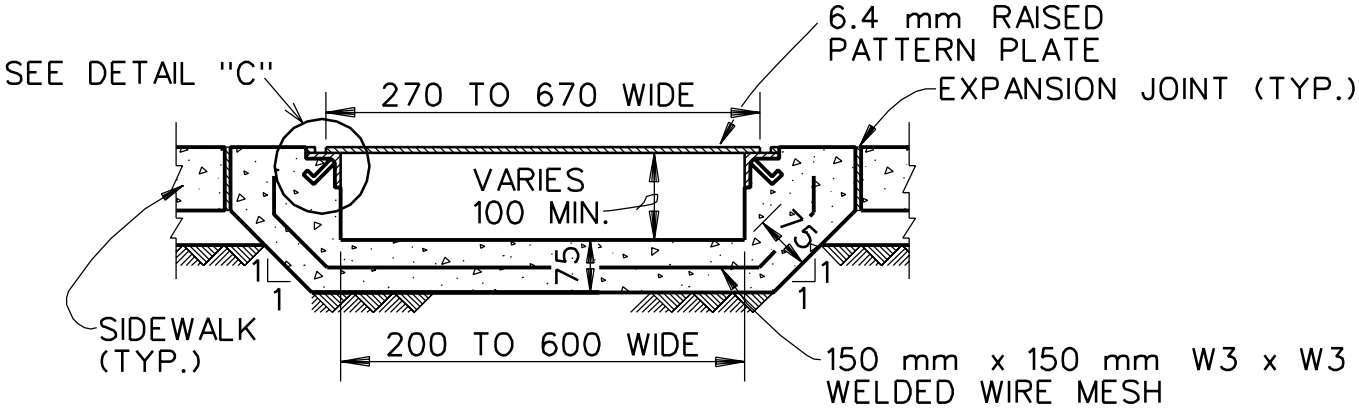

SECTION

SIDEWALK DRAIN DETAILS

N.T.S.

PLATE C18

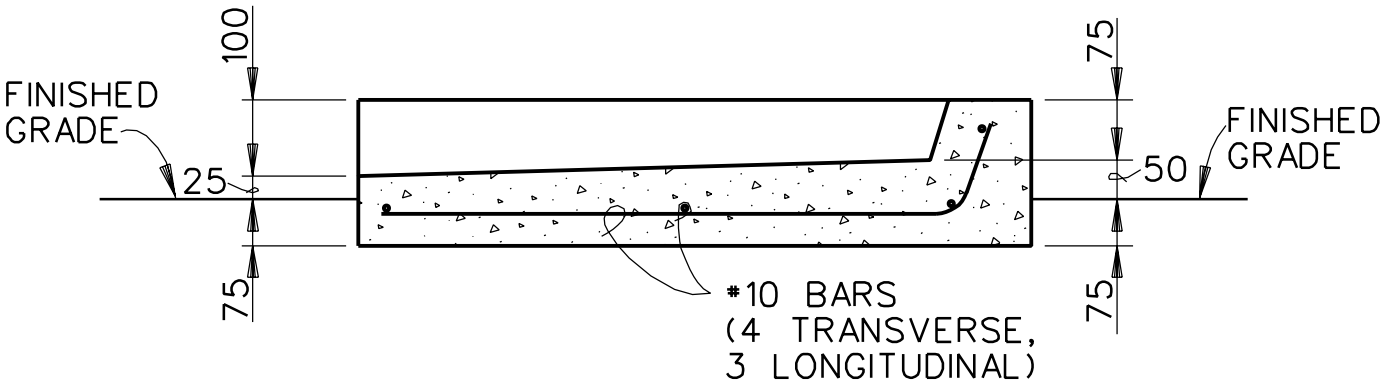

SECTION A

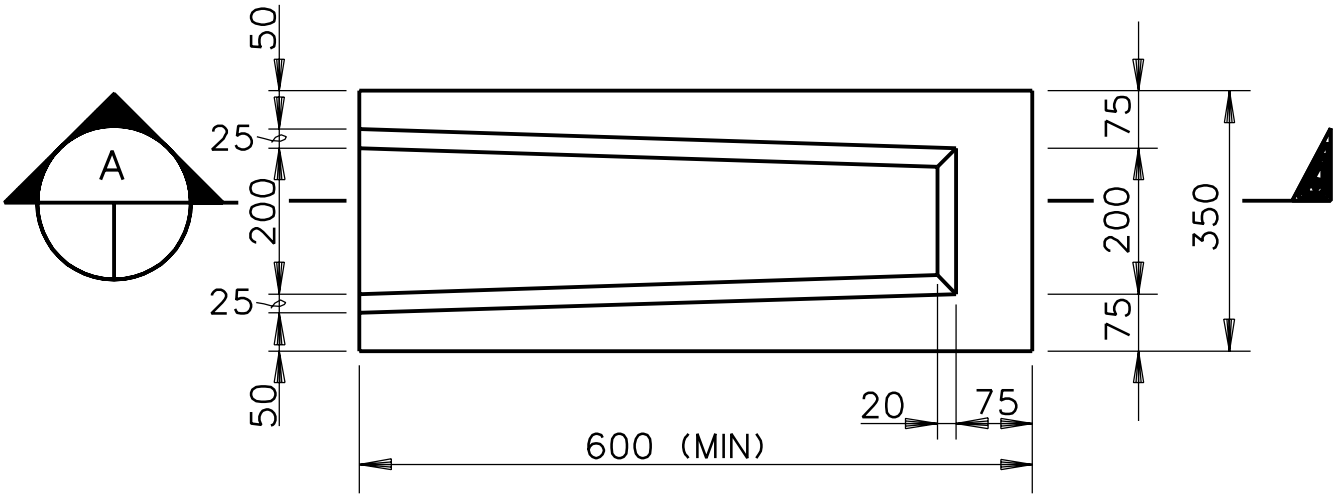

PLAN

SPLASH BLOCK DETAIL

N.T.S.

NOTE:
APPROVED STANDARD MANUFACTURED
SPLASH BLOCK MAY BE USED

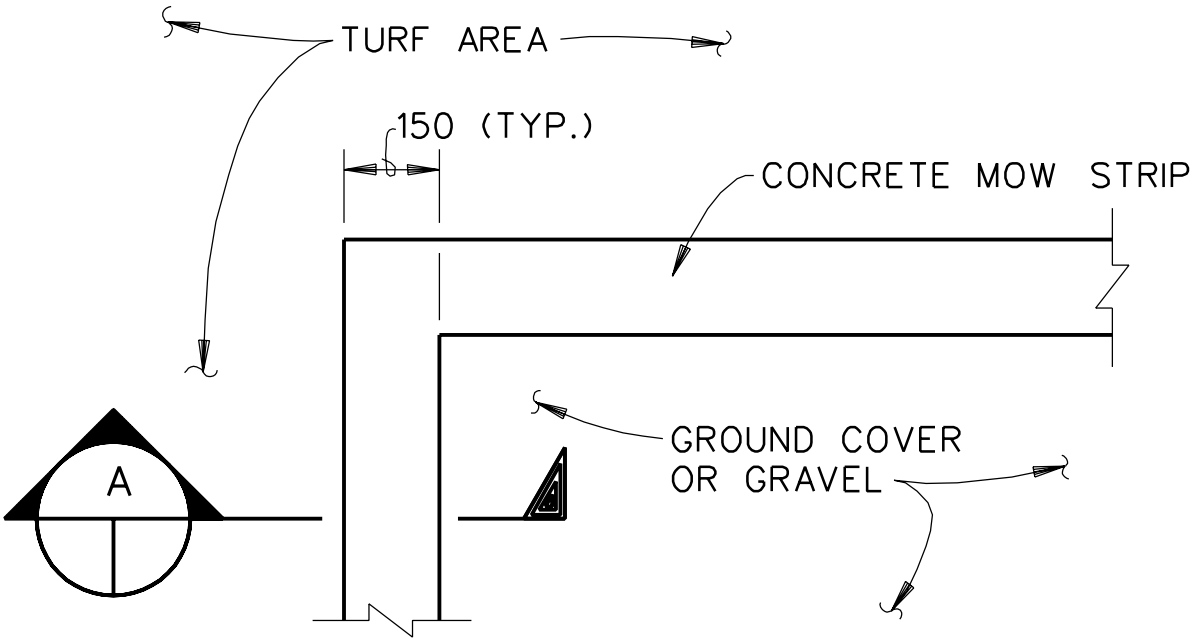

PLAN

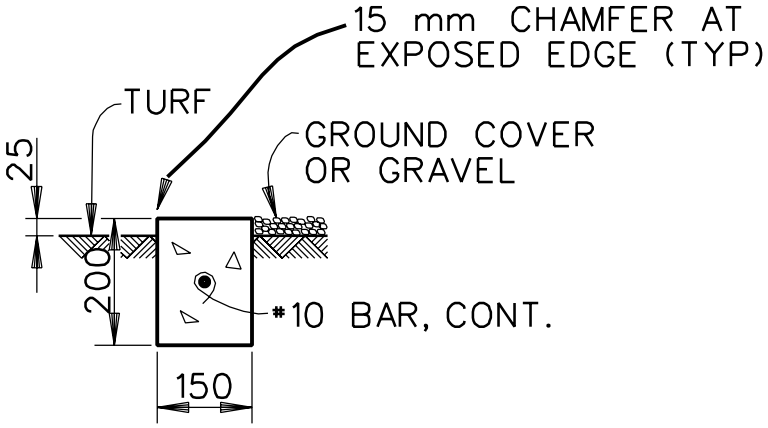

SECTION A

CONCRETE MOW STRIP DETAIL

N.T.S.

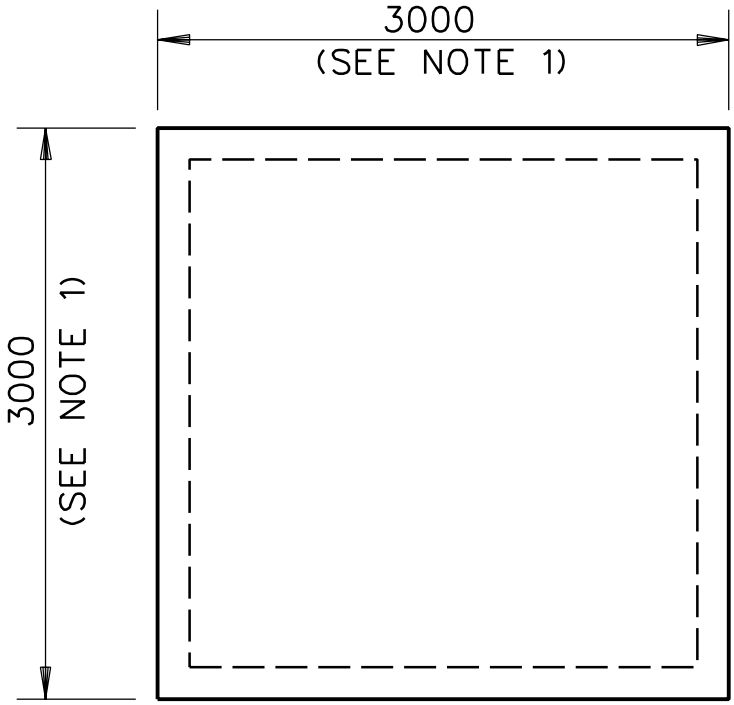

PLAN

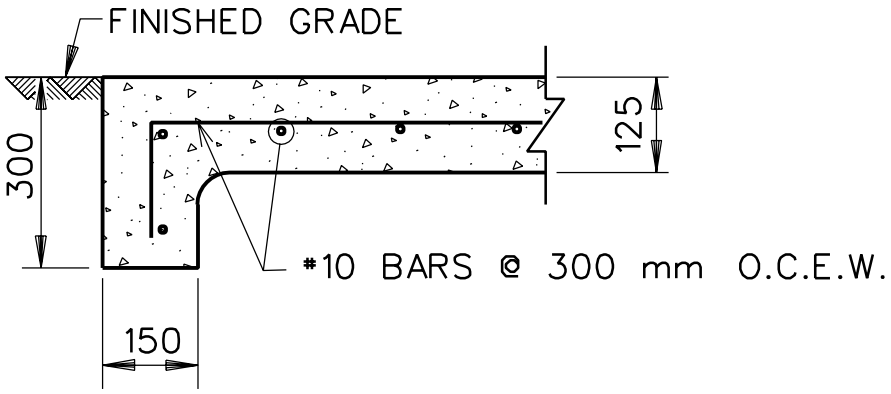

TYPICAL SECTION

DUMPSTER PAD DETAIL

N.T.S.

NOTES TO DESIGNER:

1. VERIFY PLAN DIMENSIONS OF PAD WITH USER
2. PROVIDE 5600 mm OF CONCRETE PAVEMENT IN FRONT OF DUMPSTER PAD

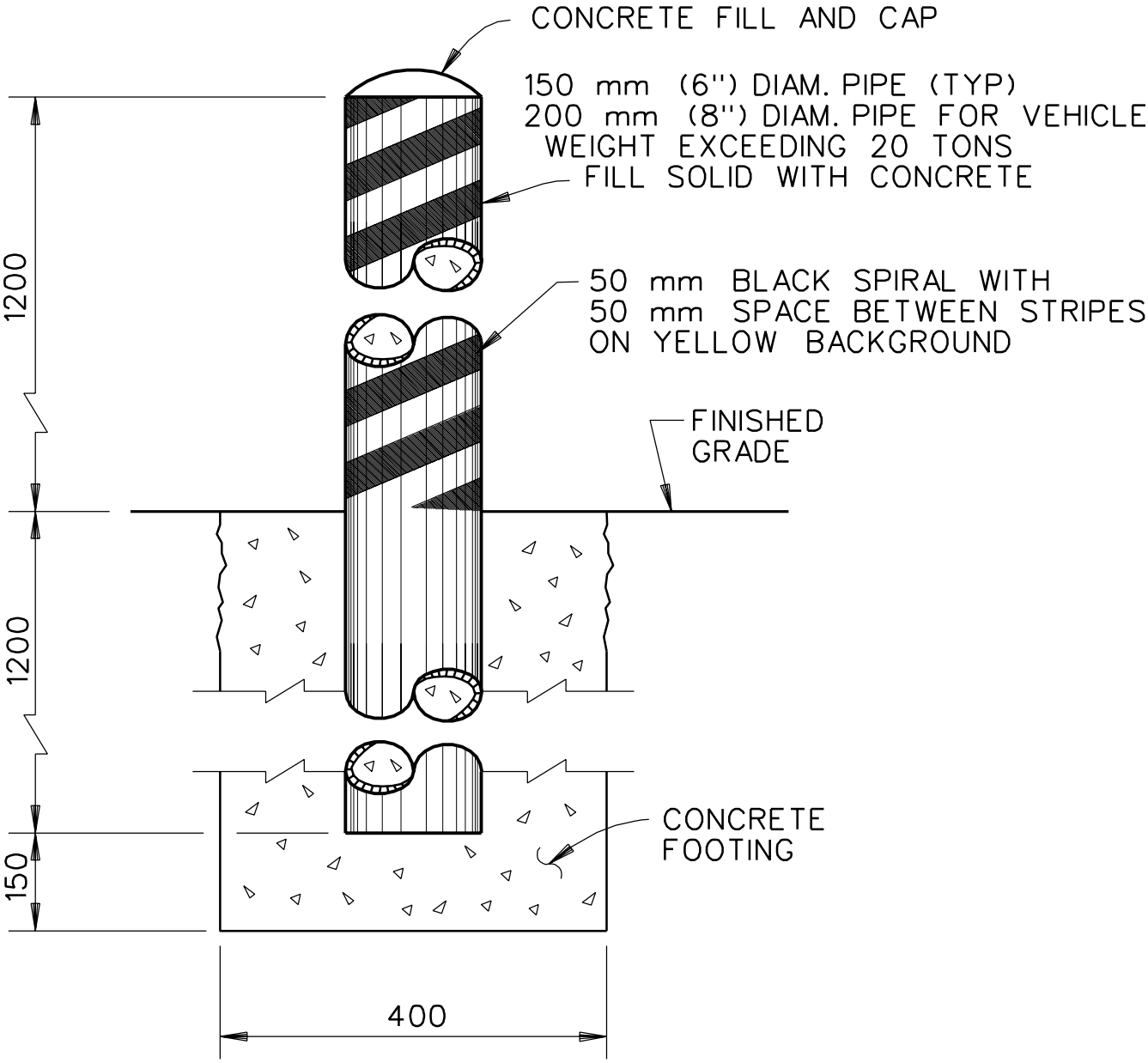

PIPE GUARD DETAIL

N.T.S.

NOTES TO DESIGNER:

PAINTING REQUIREMENTS, INCLUDING COLOR AND STRIPING, SHOULD BE COORDINATED WITH USER.

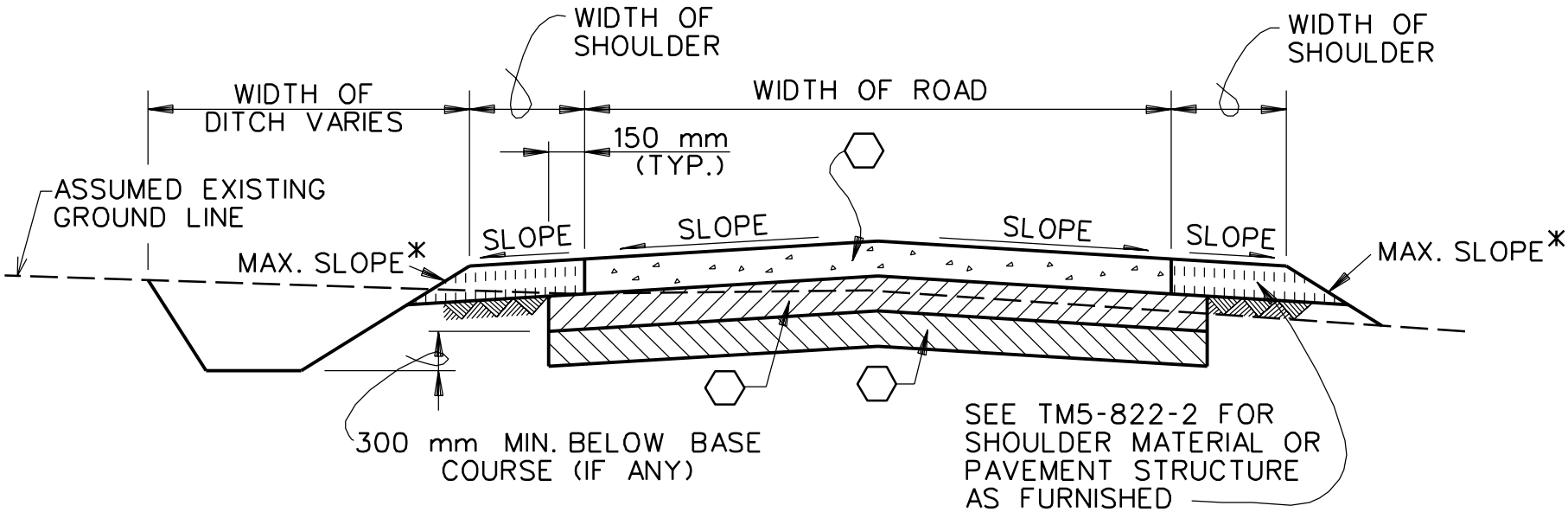

*DESIRABLE MAXIMUM SLOPE 1 ON 4; ABSOLUTE MAXIMUM 1 ON 3. PROVIDE SLOPE PROTECTION WHEN STEEPER SLOPES ARE NECESSARY.

TYPICAL ROAD SECTION - RIGID

N.T.S.

NOTES TO DESIGNER:

1. WIDTH AND CROSS SLOPES OF ROAD AND SHOULDERS SHALL BE IN ACCORDANCE WITH TM5-822-2.
2. IN ALL SECTIONS SHOW TYPES AND THICKNESSES OF ALL MATERIALS IN "PAVEMENT STRUCTURE" PRECISELY AS FURNISHED OR USE SYMBOLS AND PAVING NOTES.

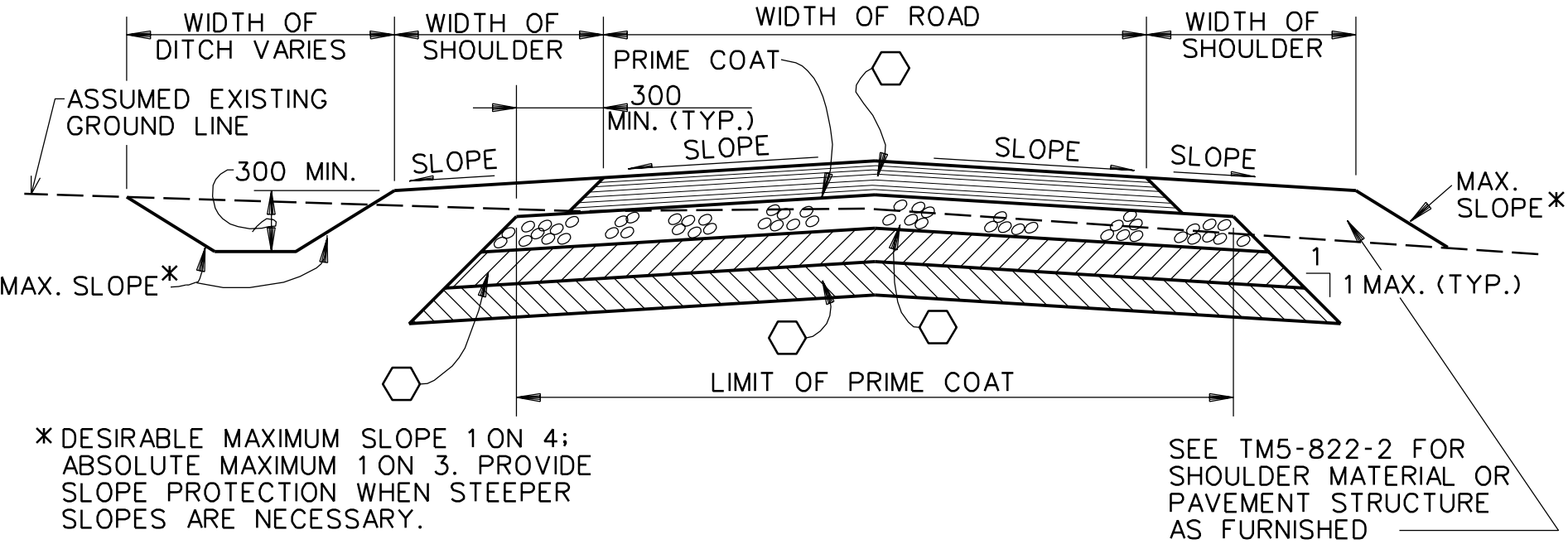

TYPICAL ROAD SECTION - FLEXIBLE

N.T.S.

NOTES TO DESIGNER:

1. WIDTH AND CROSS SLOPES OF ROAD AND SHOULDERS SHALL BE IN ACCORDANCE WITH TM5-822-2.
2. IN ALL SECTIONS SHOW TYPES AND THICKNESSES OF ALL MATERIALS IN "PAVEMENT STRUCTURE" PRECISELY AS FURNISHED OR USE SYMBOLS AND PAVING NOTES.

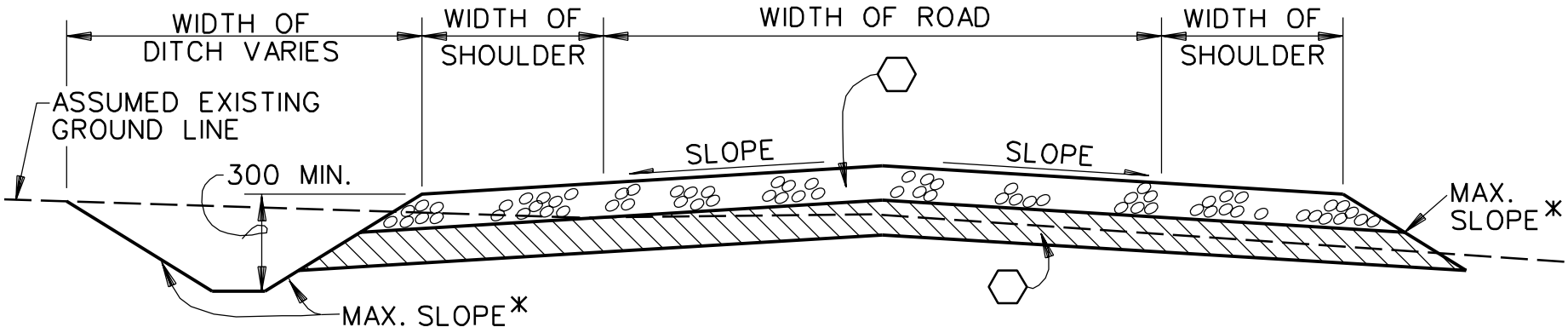

* DESIRABLE MAXIMUM SLOPE 1 ON 4; ABSOLUTE MAXIMUM 1 ON 3. PROVIDE SLOPE PROTECTION WHEN STEEPER SLOPES ARE NECESSARY.

TYPICAL ROAD SECTION - GRAVEL

N.T.S.

NOTES TO DESIGNER:

1. WIDTH AND CROSS SLOPES OF ROAD AND SHOULDERS SHALL BE IN ACCORDANCE WITH TM5-822-2.
2. IN ALL SECTIONS SHOW TYPES AND THICKNESSES OF ALL MATERIALS IN "PAVEMENT STRUCTURE" PRECISELY AS FURNISHED OR USE SYMBOLS AND PAVING NOTES.

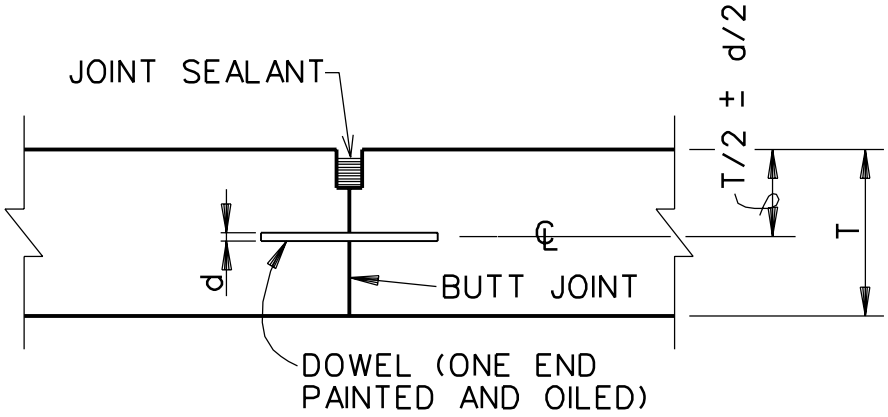

TRANSVERSE OR LONGITUDINAL

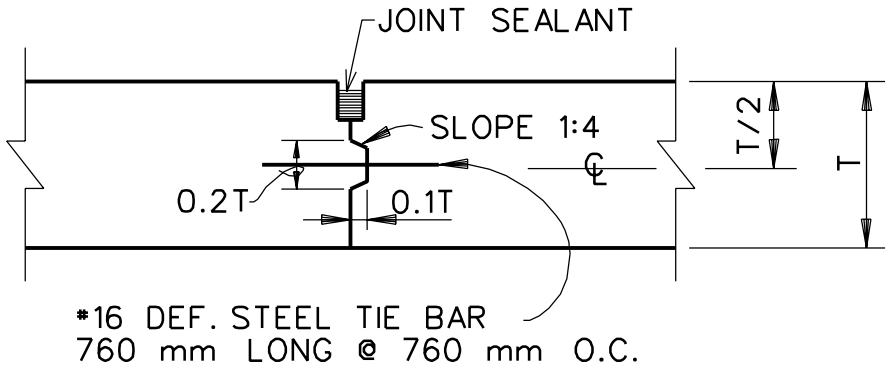

LONGITUDINAL

NOTE: SEE JOINT SEALANT DETAILS, ON PLATE C-30.

CONSTRUCTION JOINTS

(PLAIN CONCRETE PAVEMENTS)
N.T.S.

NOTES TO DESIGNER:

1. KEYED LONGITUDINAL CONSTRUCTION JOINTS SHALL NOT BE USED IN PAVEMENTS 200 mm OR LESS IN THICKNESS, EXCEPT AS REQUIRED AT THE CENTER OF 2-LANE PAVEMENTS.
2. FOR PAVEMENTS MORE THAN 200 mm IN THICKNESS, A KEYED LONGITUDINAL CONSTRUCTION JOINT SHALL BE USED. TIE BARS ARE NOT REQUIRED EXCEPT AT THE CENTER OF 2-LANE PAVEMENTS.
3. PROVIDE REQ'D. DOWEL SIZE AND SPACING IN ACCORDANCE WITH TM5-822-5.

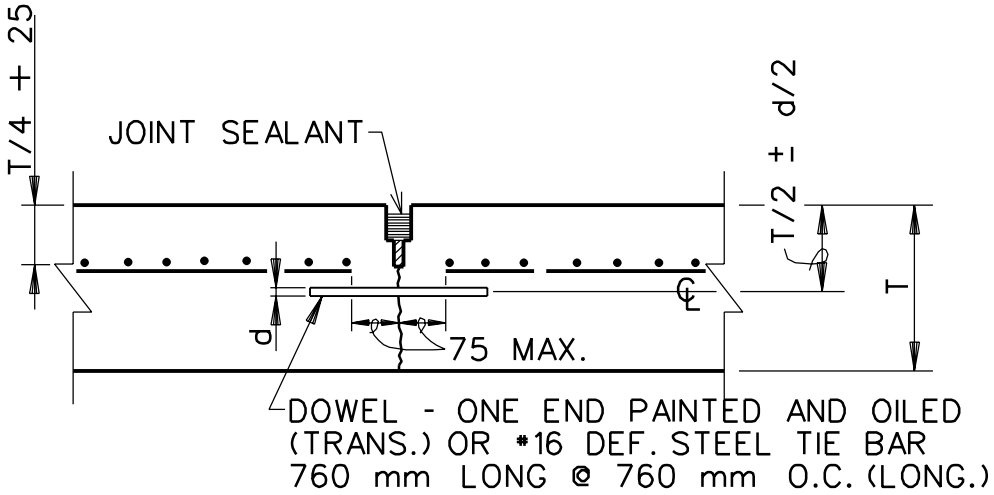

TRANSVERSE OR LONGITUDINAL

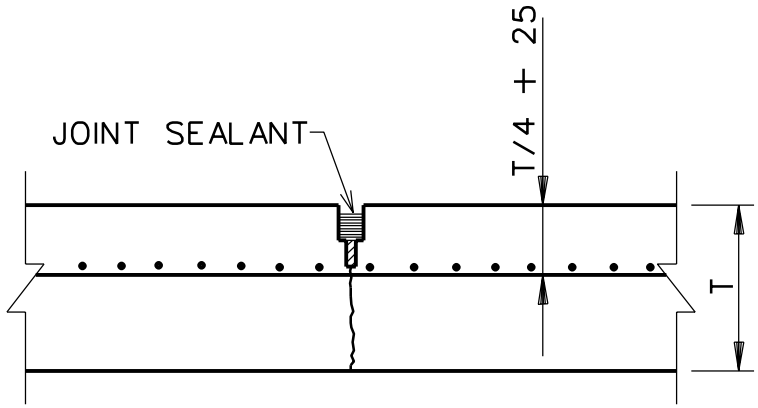

LONGITUDINAL (1)

NOTE: SEE JOINT SEALANT DETAILS, PLATE C-30.

CONTRACTION JOINT

(REINFORCED PAVEMENT)
N.T.S.

NOTES TO DESIGNER:

1. CONDITION WHERE TWO TRAFFIC LANES ARE PLACED AS A SINGLE PAVING LANE. WHEN JOINT IS REQUIRED AT THE CENTERLINE, REINFORCING STEEL IS NOT CARRIED THROUGH THE JOINT AND TIE BARS SHALL BE USED.
2. PROVIDE REQ'D. DOWEL SIZE AND SPACING IN ACCORDANCE WITH TM 5-822-5.

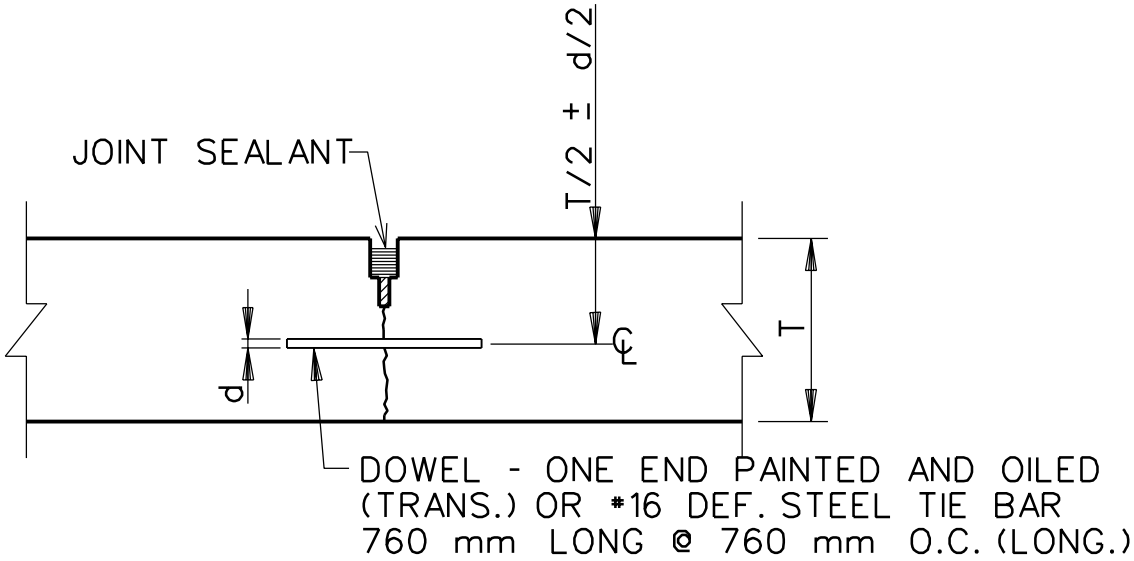

LONGITUDINAL OR TRANSVERSE

NOTE: SEE JOINT SEALANT DETAILS, PLATE C-30.

CONTRACTION JOINT

(PLAIN CONCRETE PAVEMENT)
N.T.S.

NOTES TO DESIGNER:

1. DOWEL TO BE USED ON TRANSVERSE JOINTS FOR CLASS "A" AND "B" PAVEMENTS ONLY.
2. IF DOWEL IS REQUIRED, PROVIDE SIZE AND SPACING IN ACCORDANCE WITH TM 5-822-5.
3. FOR AIRFIELD PAVEMENTS REQUIRING USE OF PREFORMED ELASTOMERIC SEALS, JOINT SEALANT DIMENSIONS SHALL BE REVISED TO ACCOMODATE SEAL.

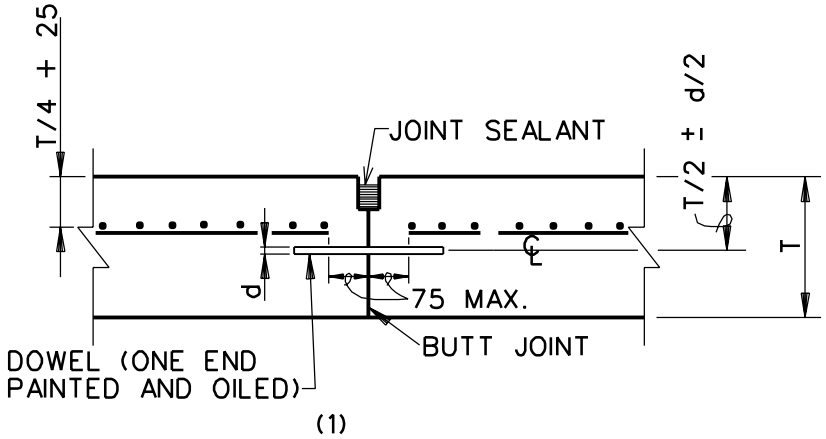

TRANSVERSE (1) OR LONGITUDINAL

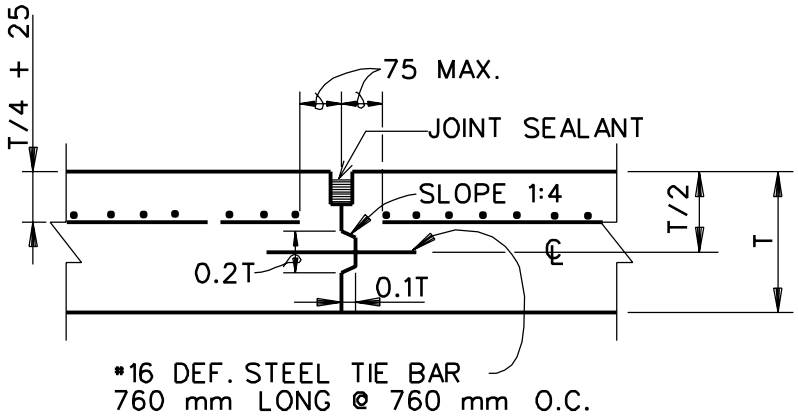

LONGITUDINAL

NOTE: SEE JOINT SEALANT DETAILS, PLATE C-30.

CONSTRUCTION JOINTS

(REINFORCED PAVEMENTS)
N.T.S.

NOTES TO DESIGNER:

(1) 1. JOINT SHOWN TO BE USED AT A REGULARLY SCHEDULED TRANSVERSE CONTRACTION JOINT. FOR A TRANSVERSE CONSTRUCTION JOINT AT A LOCATION OTHER THAN REGUARLY SCHEDULED CONTRACTION JOINT:
   a) THE REINFORCEMENT SHALL BE CARRIED THROUGH THE JOINT.
   b) DOWELS SHALL NOT BE PAINTED OR OILED.
   c) NO GROOVE OR JOINT SEAL NEEDS TO BE PROVIDED.

2. KEYED LONGITUDINAL CONSTRUCTION JOINTS SHALL NOT BE USED IN PAVEMENTS 200 mm OR LESS IN THICKNESS, EXCEPT AS REQUIRED AT THE CENTER OF 2-LANE PAVEMENTS.

3. FOR PAVEMENTS MORE THAN 200 mm IN THICKNESS, A KEYED LONGITUDINAL CONSTRUCTION JOINT SHALL BE USED. TIE BARS ARE NOT REQUIRED EXCEPT AT THE CENTER OF 2-LANE PAVEMENTS.

4. PROVIDE REQ'D. DOWEL SIZE AND SPACING IN ACCORDANCE WITH TM 5-822-5.

5. FOR AIRFIELD PAVEMENTS REQUIRING USE OF PREFORMED ELASTOMERIC SEALS, JOINT SEALANT DIMENSIONS SHALL BE REVISED TO ACCOMODATE SEAL.

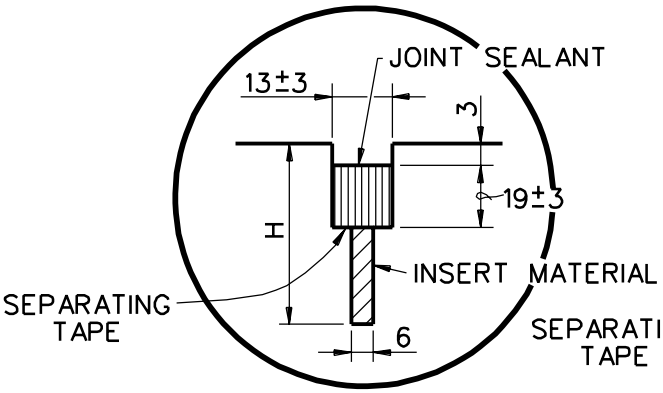

INSERT TYPE

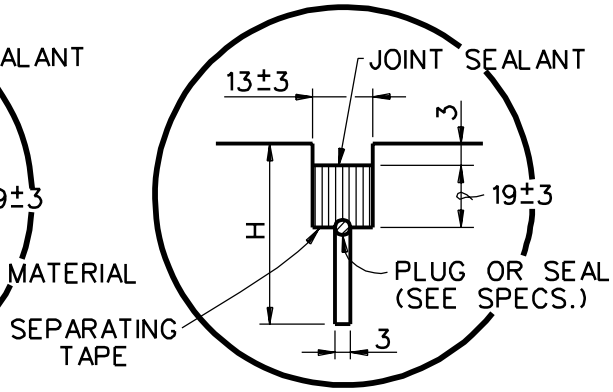

SAWED

CONTRACTION JOINT OPTIONS

FOR USE WITH JOINT SPACING UP TO 7.5 METERS

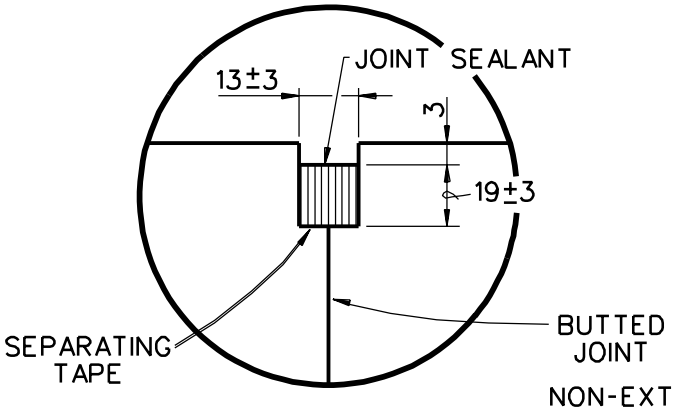

CONSTRUCTION JOINTS

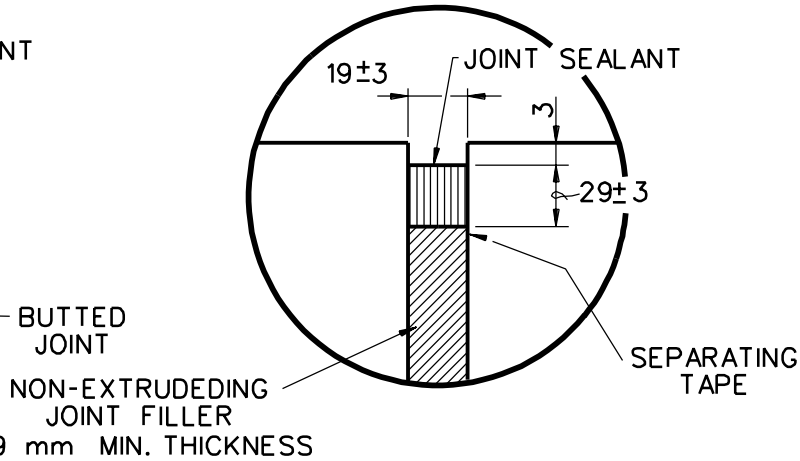

EXPANSION JOINTS

JOINT SEALANT DETAILS
ROADS, STREETS AND OPEN STORAGE AREAS

N. T. S.

NOTES TO DESIGNER:

1. H = 1/4 SLAB THICKNESS FOR PAVEMENT LESS THAN 300 mm THICK; 75 mm FOR PAVEMENT 300 mm to 460 mm THICK; 1/6 SLAB THICKNESS FOR PAVEMENT GREATER THAN 460 mm THICK.
2. JOINT SEALANT WILL BE RECESSED 8 mm ± 2 mm ON PAVEMENTS USED BY TRACKED VEHICLES. OTHER DIMENSIONS WILL STILL APPLY (I.E. JOINT SEALANT @ 20 mm ± 3 mm).
3. FOR AIRFIELD PAVEMENTS REQUIRING USE OF PREFORMED ELASTOMERIC SEALS, JOINT SEALANT DIMENSIONS SHALL BE REVISED TO ACCOMODATE SEAL.
4. PREFORMED COMPRESSION JOINT SEALANTS SHALL COMPLY WITH TM5-822-5 AND THE SPECIFICATIONS. RECOMMENDED WHEN JOINT SPACINGS ARE GREATER THAN 7.5 METERS AND REQUIRED WHEN EXCEEDING 15 METERS.

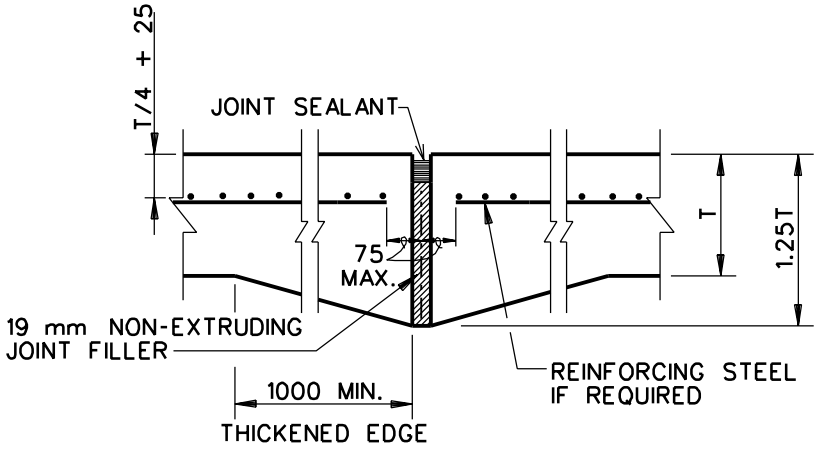

THICKENED EDGE EXPANSION JOINT

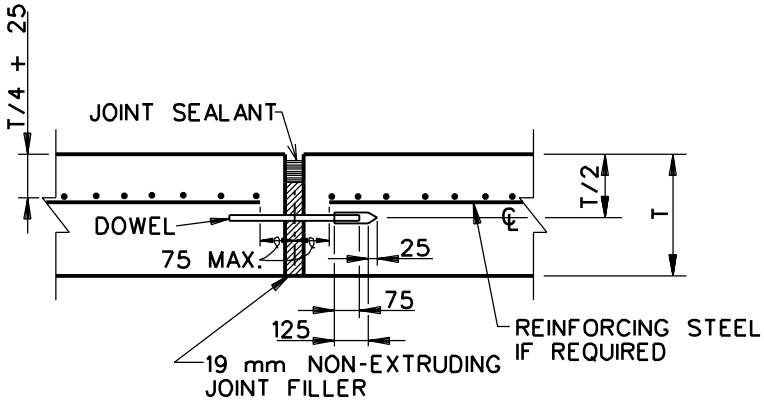

DOWELED EXPANSION JOINT

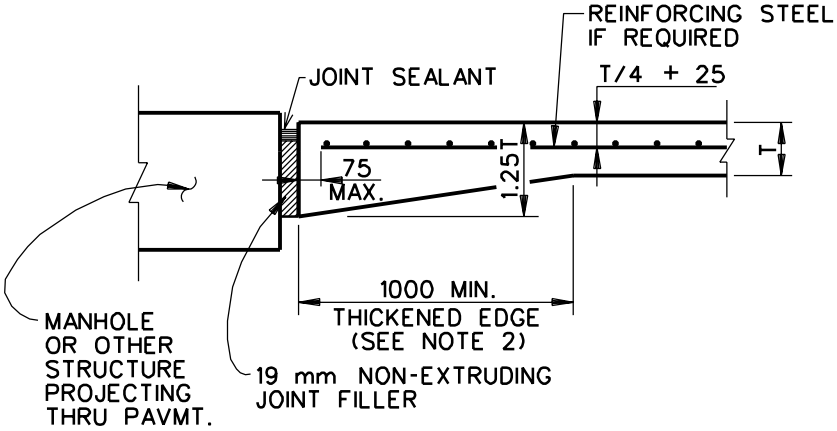

AT STRUCTURES

NOTES TO DESIGNER:

1. SEE PLATE C-30 FOR JOINT SEALANT DETAILS.
2. THICKENED EDGE IS NOT REQUIRED ABUTTING BLDG. FOUNDATIONS; HOWEVER, AT VEHICULAR ACCESS RAMPS, JOINT WILL BE DOWELED.
3. IF DOWEL IS REQUIRED, PROVIDE SIZE AND SPACING.
4. FOR AIRFIELD PAVEMENTS REQUIRING USE OF PREFORMED ELASTOMERIC SEALS, JOINT SEALANT DIMENSIONS SHALL BE REVISED TO ACCOMODATE SEAL.

NOTE: SEE JOINT SEALANT DETAILS, PLATE C-30.

EXPANSION JOINTS

(PLANE CONCRETE AND REINFORCED PAVEMENTS)
N.T.S.

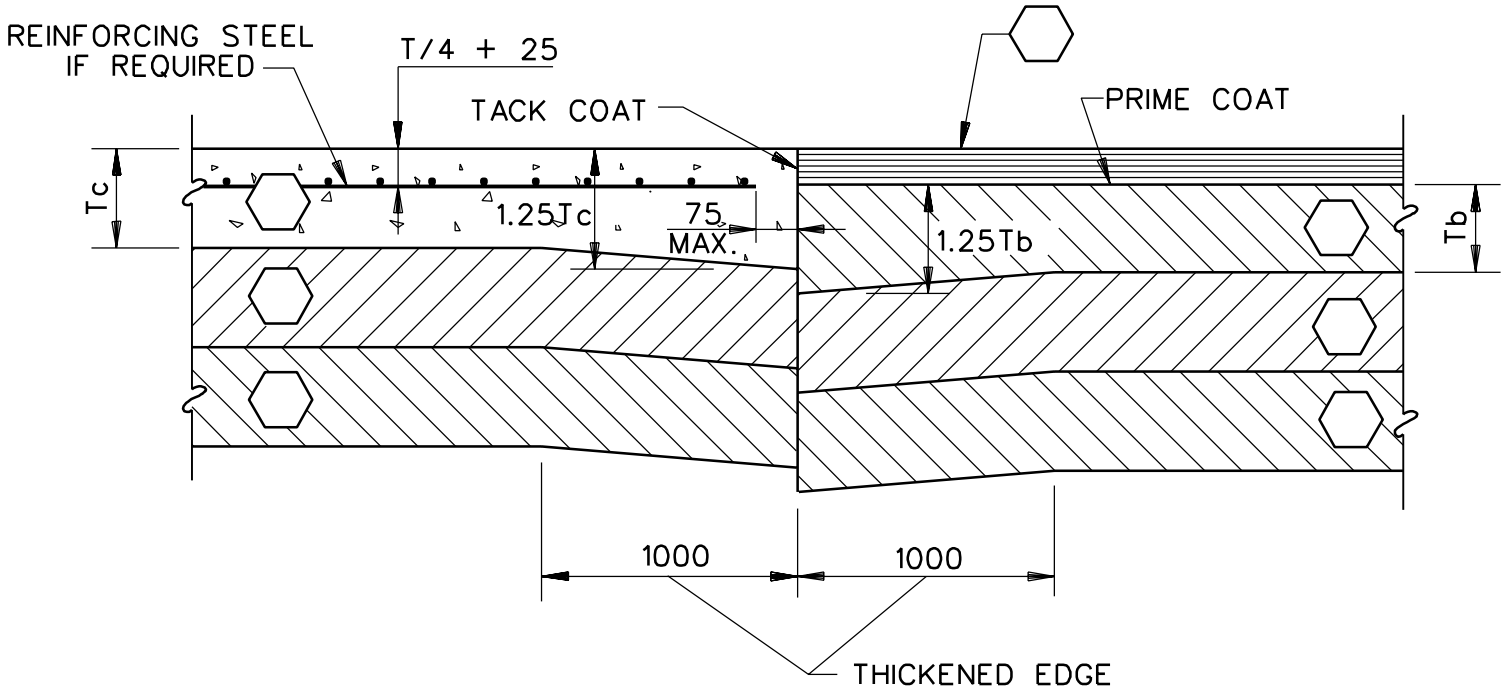

JUNCTURE OF NEW FLEXIBLE AND NEW RIGID PAVEMENT

N.T.S.

NOTE TO DESIGNER:

IDENTIFY TYPES AND THICKNESSES OF ALL MATERIALS IN "PAVEMENT STRUCTURES" PRECISELY AS FURNISHED OR USE SYMBOLS AND PAVING NOTES

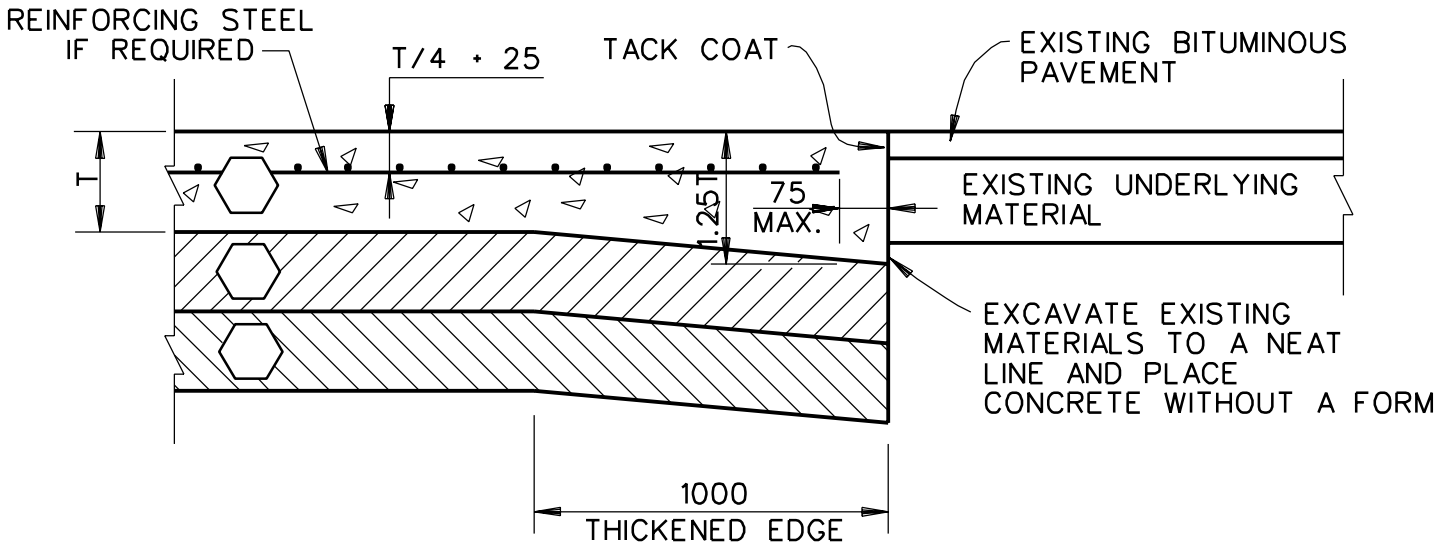

JUNCTURE OF NEW RIGID AND EXISTING FLEXIBLE PAVEMENT

N.T.S.

NOTES TO DESIGNER:

1. IDENTIFY TYPES AND THICKNESSES OF ALL MATERIALS IN "PAVEMENT STRUCTURE" PRECISELY AS FURNISHED OR USE SYMBOLS AND PAVING NOTES.
2. THIS SECTION MAY BE USED IF THE FOLLOWING CIRCUMSTANCES EXIST:
   A. THE EXISTING BITUMINOUS PAVEMENT HAS GOOD QUALITY AND SUFFICIENT THICKNESS.
   B. IT IS KNOWN THAT THE PROFILE OF THE EXISTING PAVEMENT IS SUCH THAT A FINISHED PROFILE OF THE EDGE OF THE NEW CONCRETE PAVEMENT WILL PRESENT A GOOD APPEARANCE AND WILL NOT RESTRICT DRAINAGE.

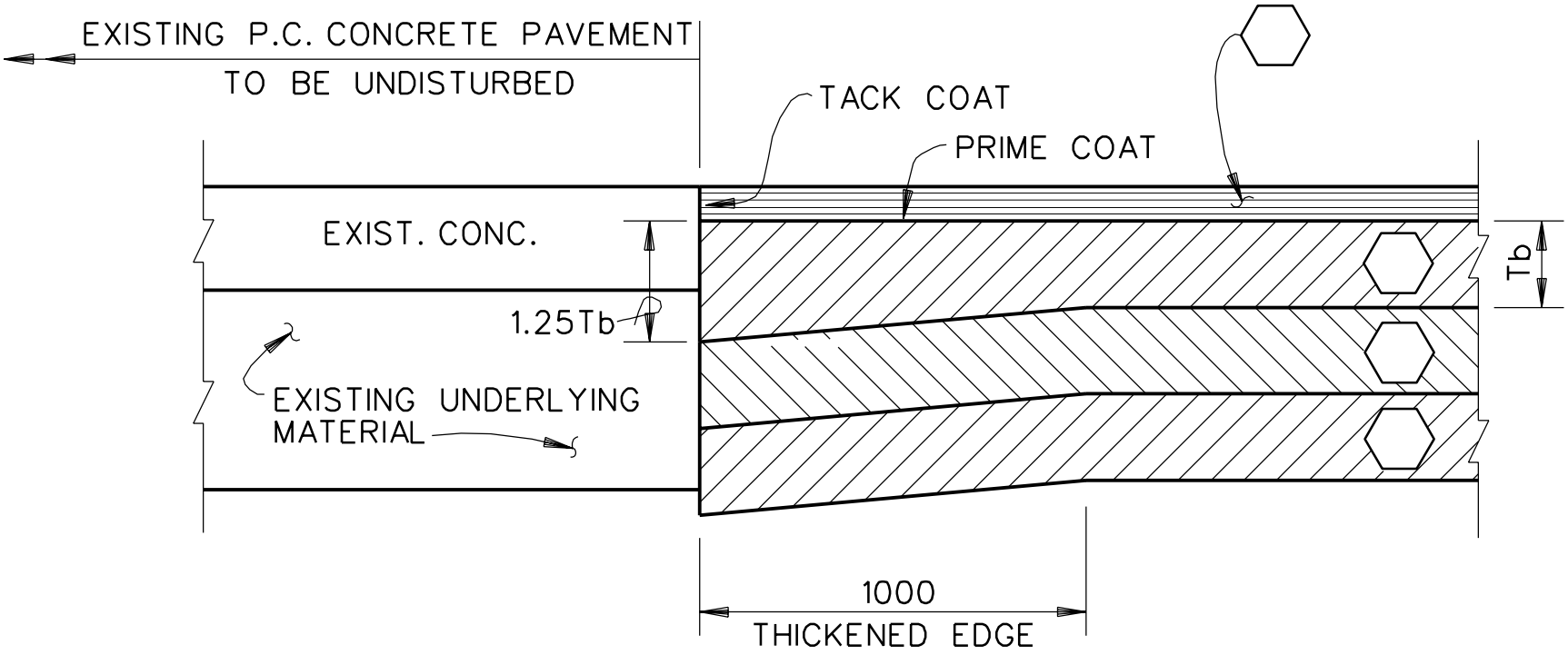

JUNCTURE OF NEW FLEXIBLE AND EXISTING RIGID PAVEMENT

N.T.S.

NOTE TO DESIGNER:

IDENTIFY TYPES AND THICKNESSES OF ALL MATERIALS IN "PAVEMENT STRUCTURE" PRECISELY AS FURNISHED OR USE SYMBOLS AND PAVING NOTES.

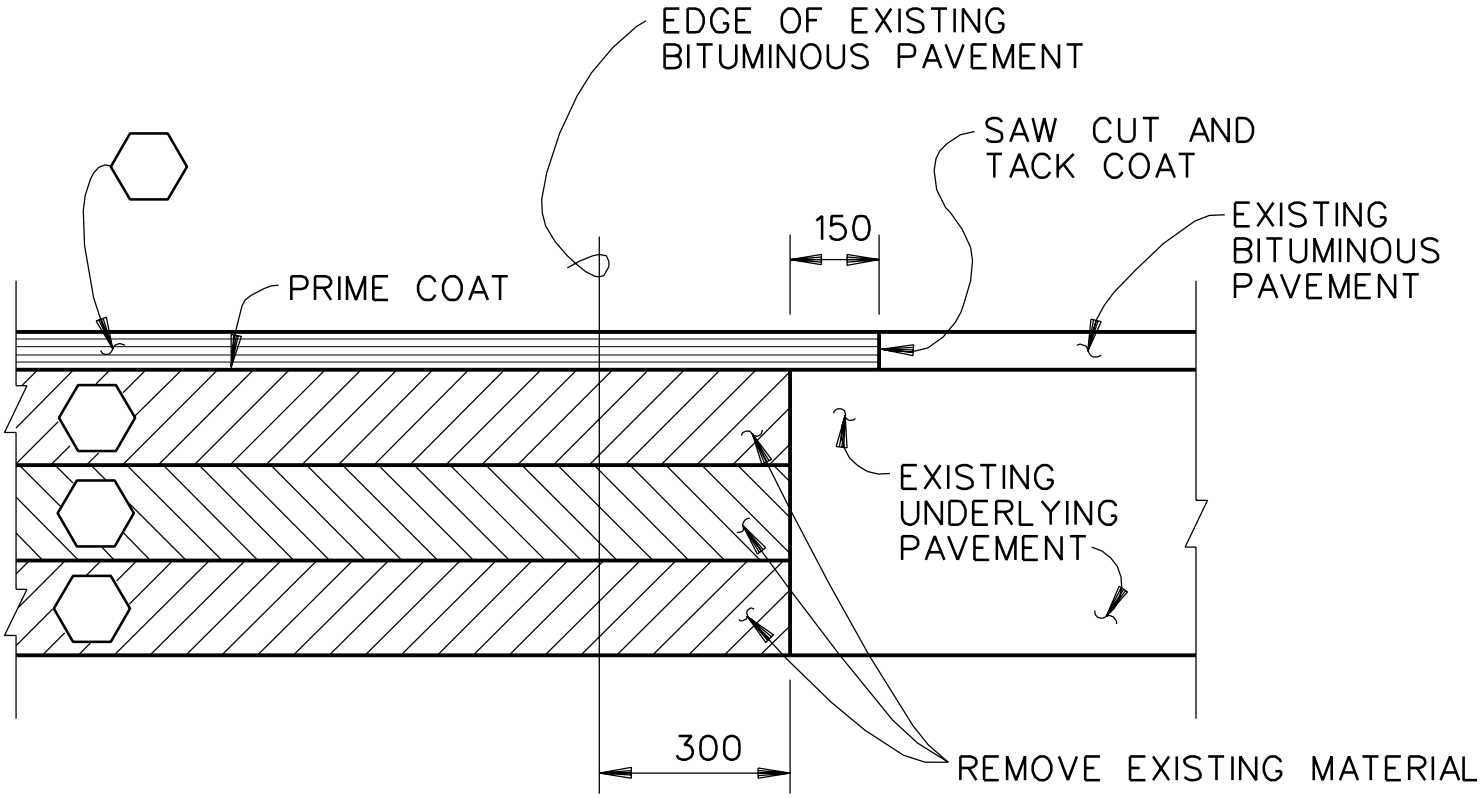

JUNCTURE OF NEW FLEXIBLE AND EXISTING FLEXIBLE PAVEMENT

N.T.S.

NOTE TO DESIGNER:

IDENTIFY TYPES AND THICKNESSES OF ALL MATERIALS IN "PAVEMENT STRUCTURE" PRECISELY AS FURNISHED OR USE SYMBOLS AND PAVING NOTES.

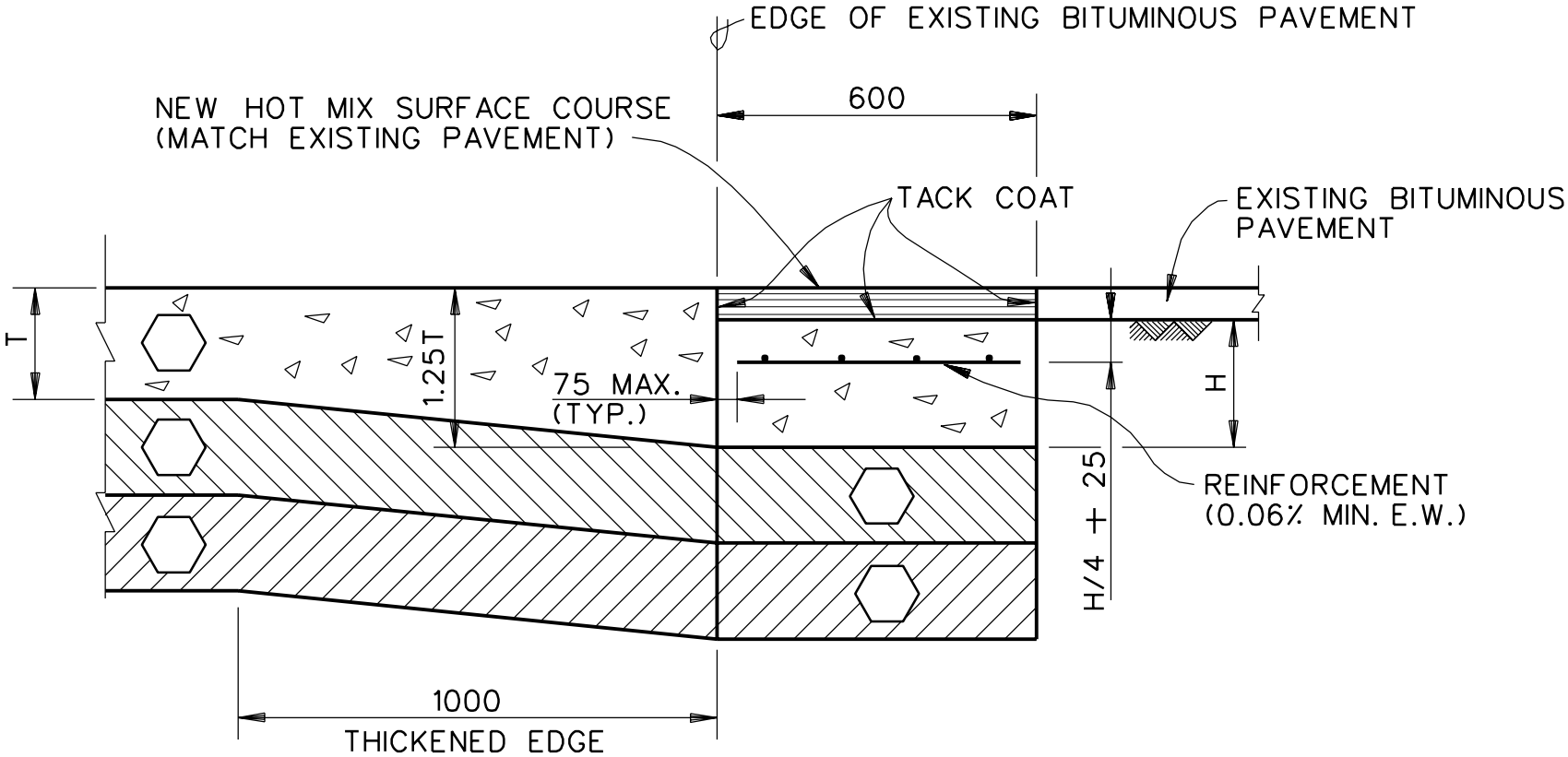

CONCRETE HEADER DETAIL

N.T.S.

NOTE TO DESIGNER:

IDENTIFY TYPES AND THICKNESSES OF ALL NEW MATERIALS IN "PAVEMENT STRUCTURE" PRECISELY AS FURNISHED OR USE SYMBOLS AND PAVING NOTES.

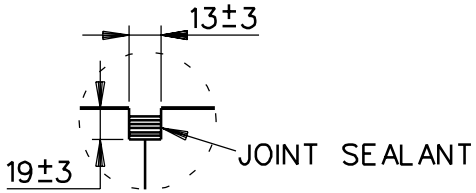

DETAIL "B"
N.T.S.

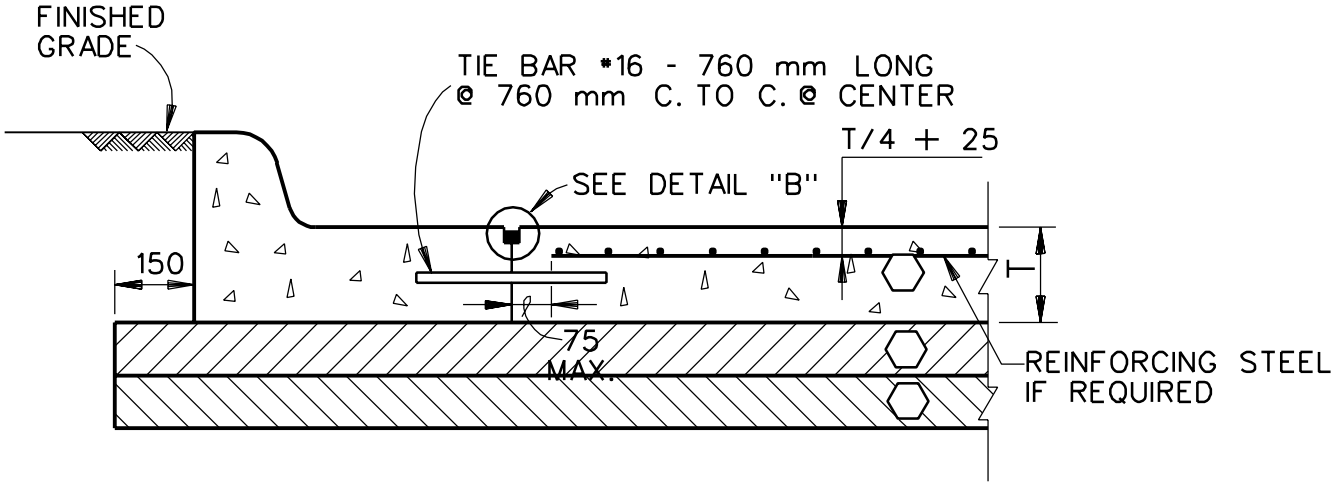

RIGID PAVEMENT WITH CURB AND GUTTER

N.T.S.

NOTES TO DESIGNER:

1. WHEN CURB IS TO BE CONSTRUCTED MONOLITHICALLY OR INTEGRALLY WITH THE SLAB, DELETE THE JOINT AND INDICATE "INTEGRAL OR MONOLITHIC CURB".
2. IDENTIFY TYPES AND THICKNESSES OF ALL MATERIALS IN "PAVEMENT STRUCTURES" PRECISELY AS FURNISHED OR USE SYMBOLS AND PAVING NOTES.

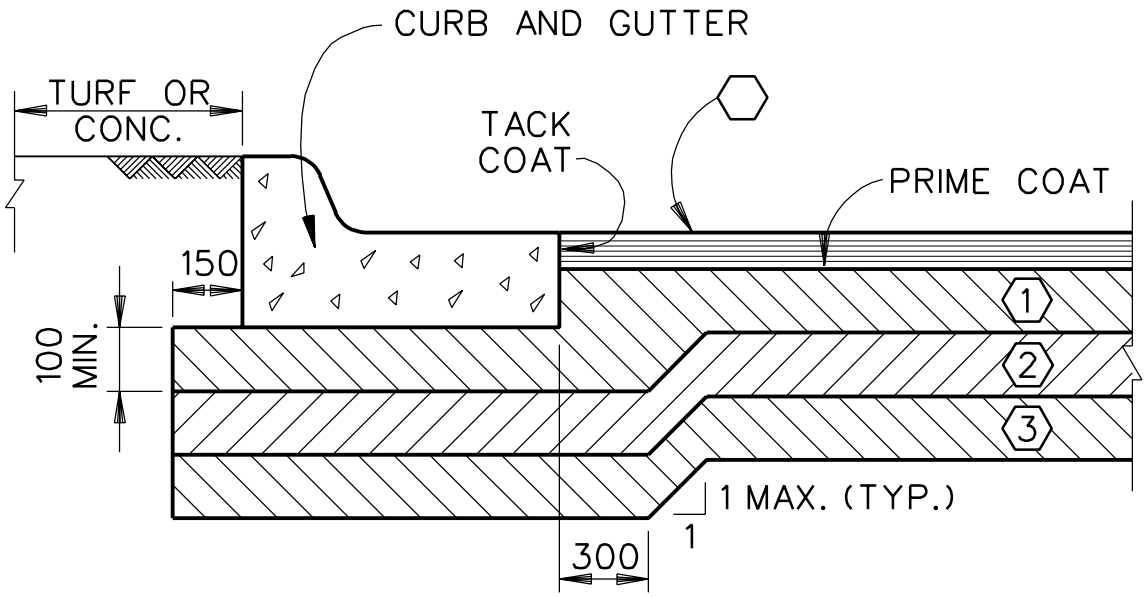

NEW FLEXIBLE PAVEMENT WITH CURB AND GUTTER

N.T.S.

NOTES TO DESIGNER:

1. IDENTIFY TYPES AND THICKNESSES OF ALL MATERIALS IN "PAVEMENT STRUCTURES" PRECISELY AS FURNISHED OR USE SYMBOLS AND PAVING NOTES.
2. NO EXPANSION JOINT IS NECESSARY BETWEEN BACK OF CURB AND SIDEWALK.
3. FORT POLK PROJECTS INVOLVING SUB-BASE WILL NOT REQUIRE THE 1 ON 1 SLOPE, AND MATERIAL ⟨1⟩ WILL TERMINATE AT THE FACE OF THE GUTTER. (MATERIAL ⟨2⟩ WILL LIE DIRECTLY BENEATH THE CURB AND GUTTER.)

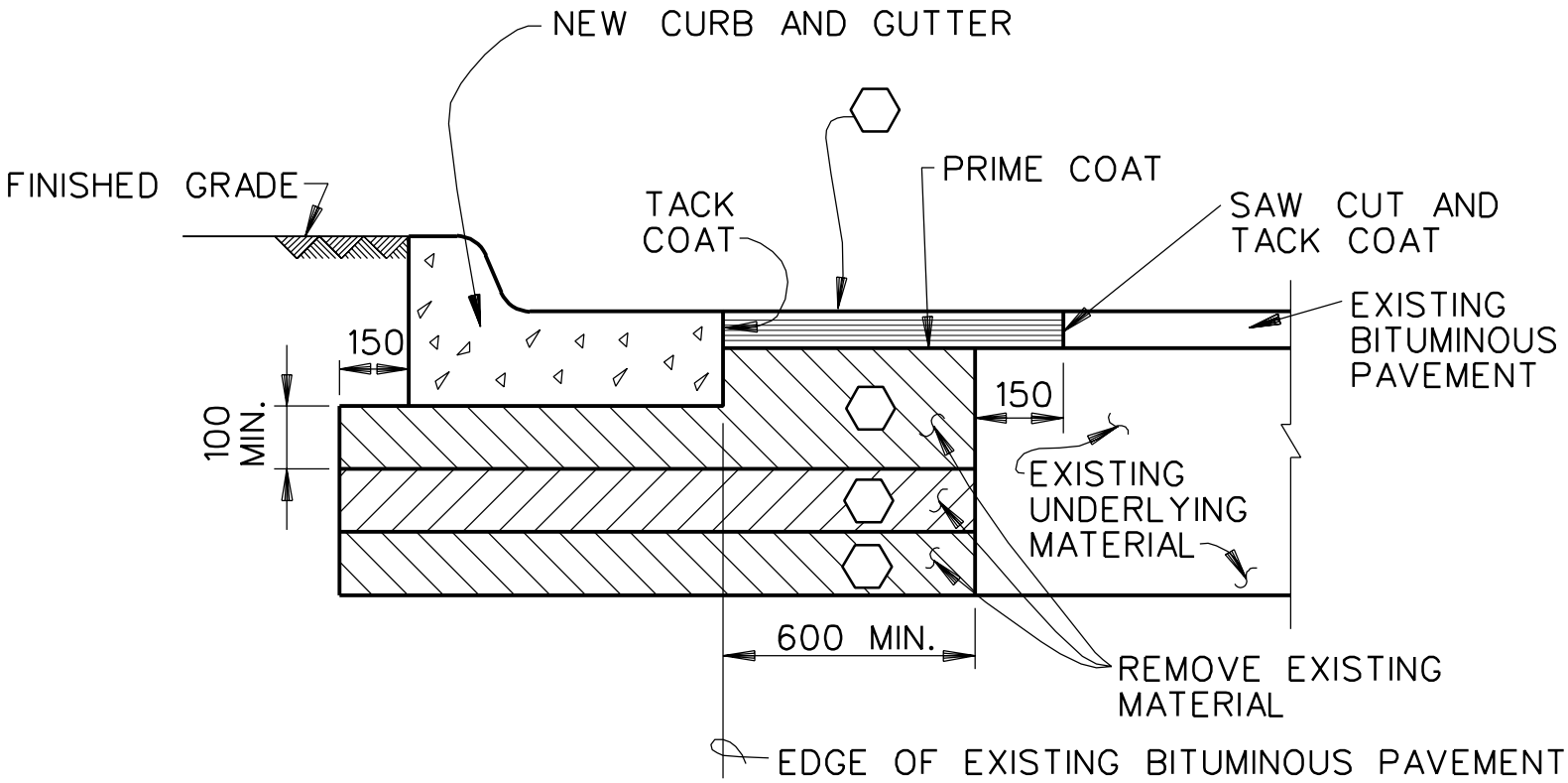

NEW CURB AND GUTTER ABUTTING EXISTING FLEXIBLE PAVEMENT

N.T.S.

NOTE TO DESIGNER:

IDENTIFY TYPES AND THICKNESSES OF ALL MATERIALS IN "PAVEMENT STRUCTURES" PRECISELY AS FURNISHED OR USE SYMBOLS AND PAVING NOTES.

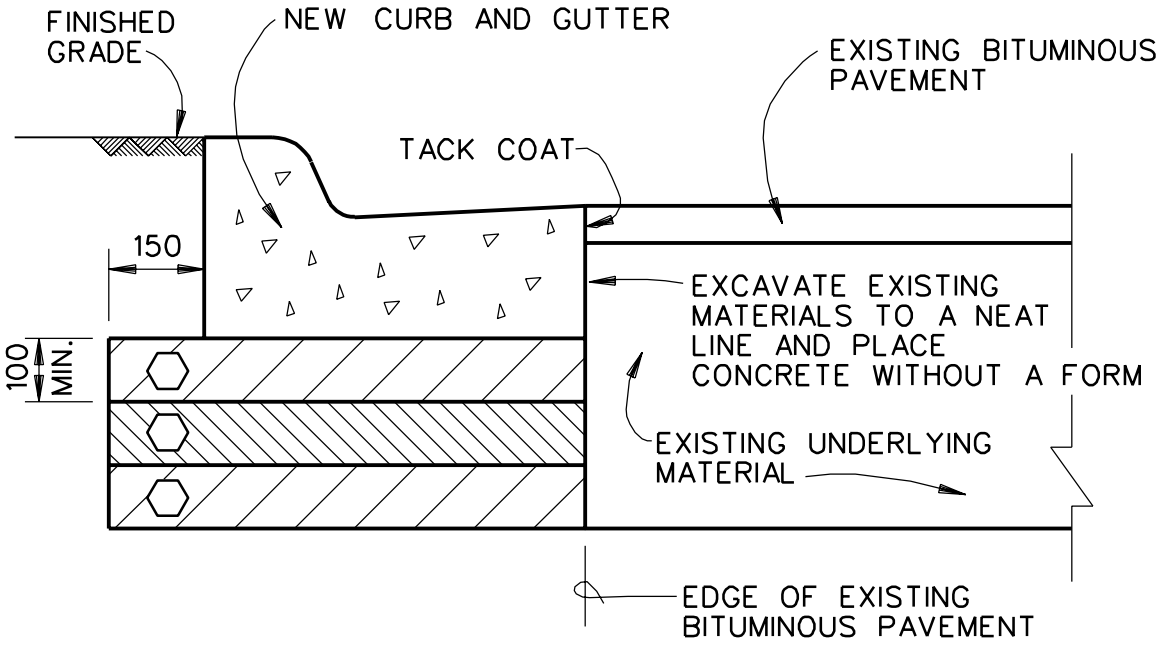

NEW CURB AND GUTTER ABUTTING EXISTING FLEXIBLE PAVEMENT

N.T.S.

NOTES TO DESIGNER:

1. IDENTIFY TYPES AND THICKNESSES OF ALL MATERIALS IN "PAVEMENT STRUCTURE" PRECISELY AS FURNISHED OR USE SYMBOLS AND PAVING NOTES.
2. THIS SECTION MAY BE USED IF ALL OF THE FOLLOWING CIRCUMSTANCES EXIST:
   - A. NEW HOT MIX PAVEMENT IS NOT OTHERWISE REQUIRED IN THE JOB.
   - B. THE EXISTING BITUMINOUS PAVEMENT HAS GOOD QUALITY AND SUFFICIENT THICKNESS.
   - C. IT IS KNOWN THAT THE PROFILE OF THE EXISTING PAVEMENT IS SUCH THAT A FINISHED PROFILE OF THE FACE OF THE GUTTER WILL PRESENT A GOOD APPEARANCE AND WILL NOT RESTRICT DRAINAGE.

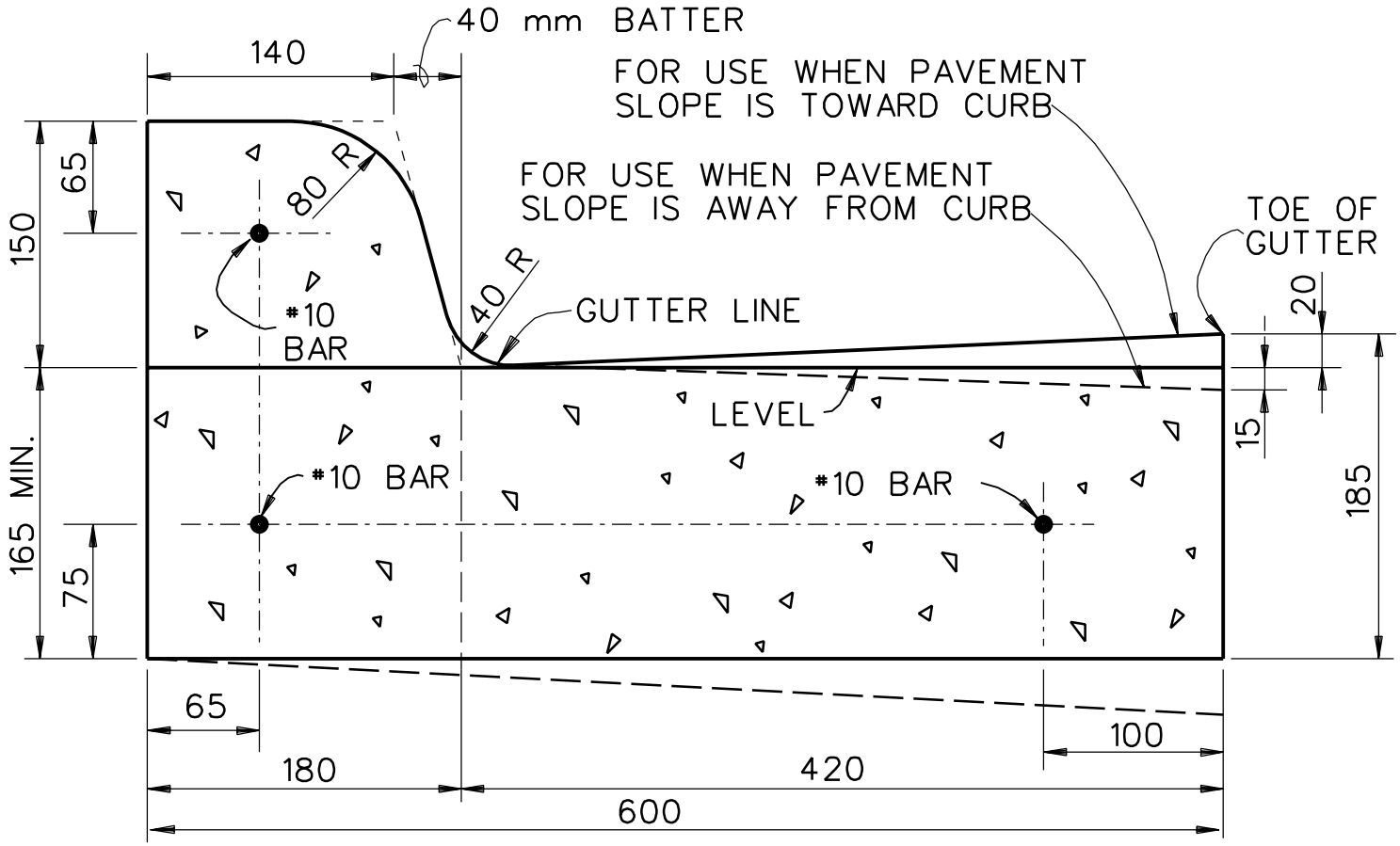

STANDARD BARRIER TYPE CONCRETE CURB AND GUTTER

N.T.S.

NOTE TO DESIGNER:

REINFORCING BARS TO BE USED FOR ALL ARMY PROJECTS, ALL PROJECTS IN THE SAN ANTONIO AREA, AND AT SHEPPARD AIR FORCE BASE.

CURB SCHEDULE				
CURB SIZE	W	X	Y	Z
75	75	92	83	40
100	100	56	100	65
125	125	49	100	65

NOTE TO DESIGNER:

REINFORCING BARS TO BE USED FOR ALL ARMY PROJECTS, ALL PROJECTS IN THE SAN ANTONIO AREA, AND AT SHEPPARD AIR FORCE BASE.

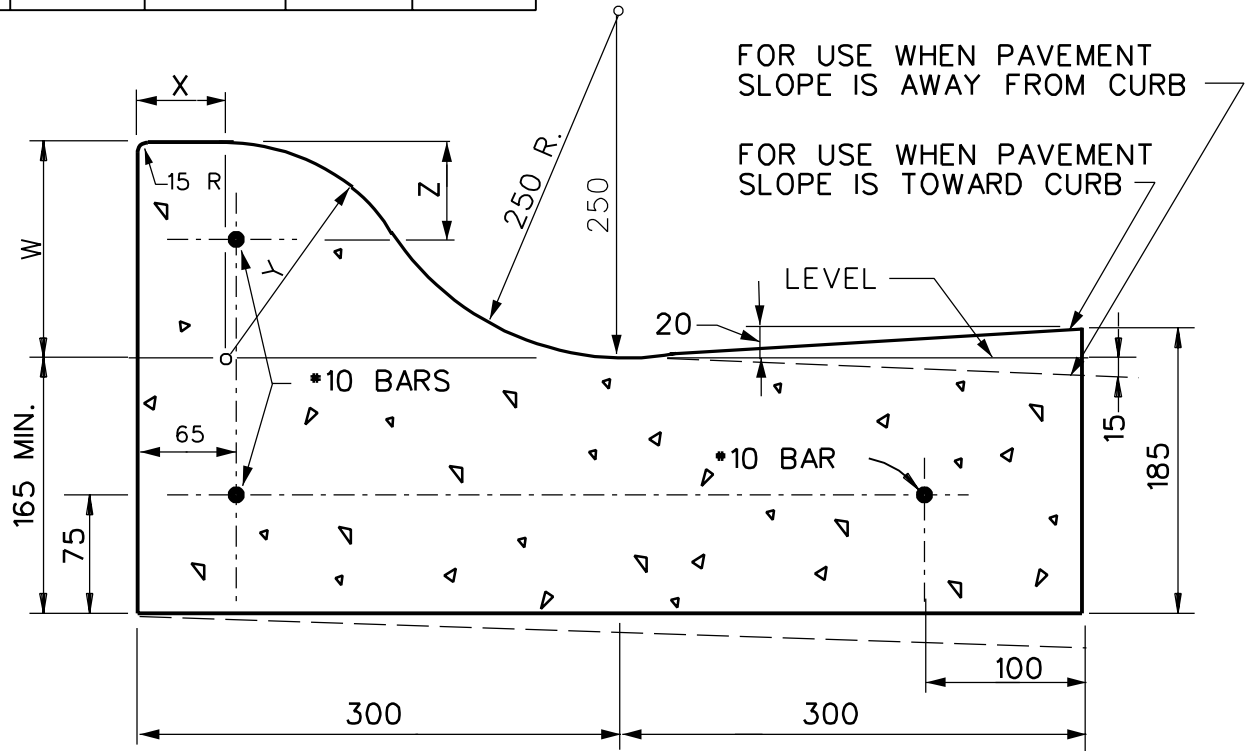

MOUNTABLE CONCRETE CURB AND GUTTER

N.T.S.

PLATE C42

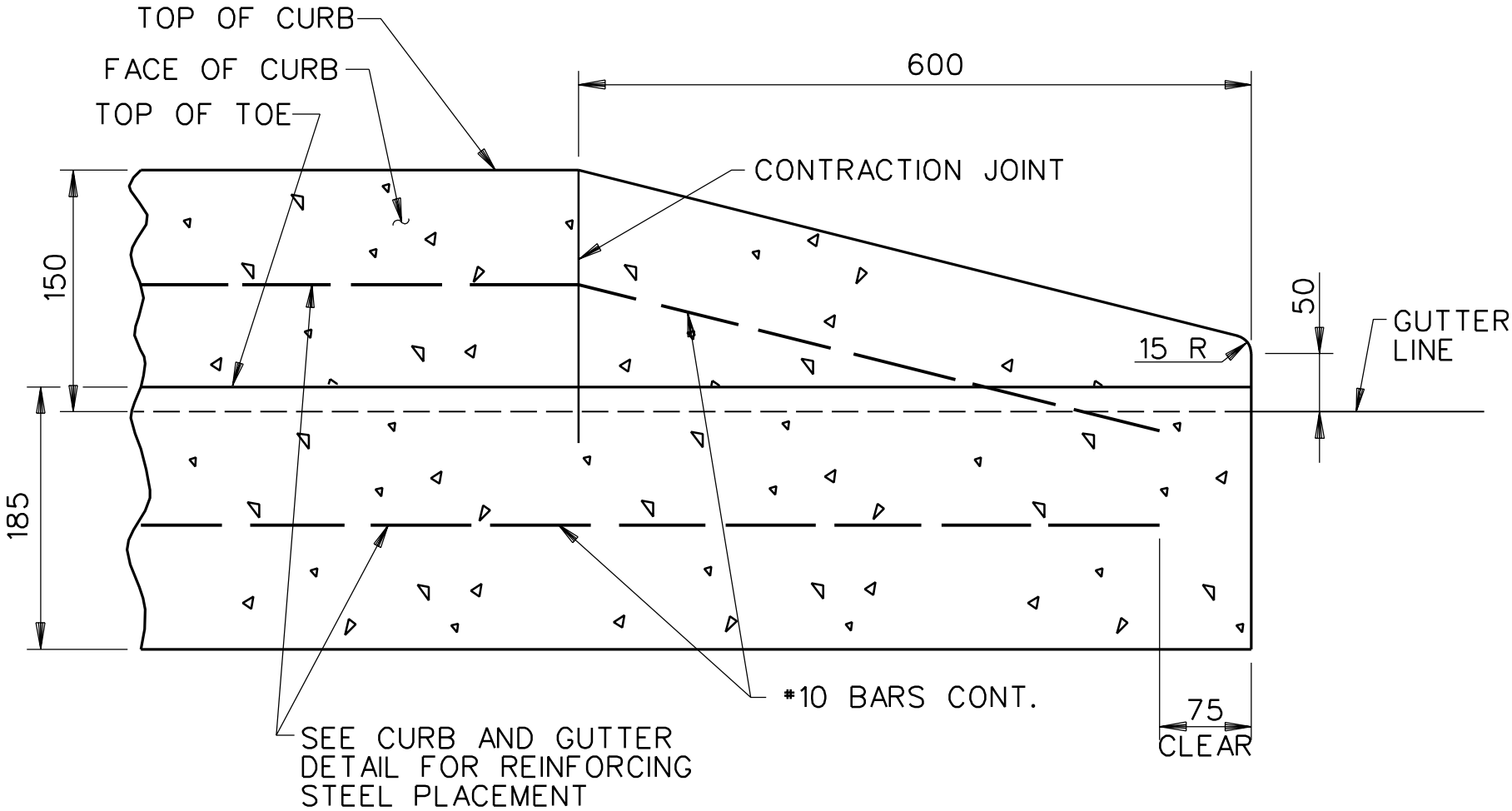

CURB TERMINAL DETAIL

(ELEVATION)
N.T.S.

NOTE TO DESIGNER:

REINFORCING BARS TO BE USED FOR ALL ARMY PROJECTS, ALL PROJECTS IN THE SAN ANTONIO AREA, AND AT SHEPPARD AIR FORCE BASE.

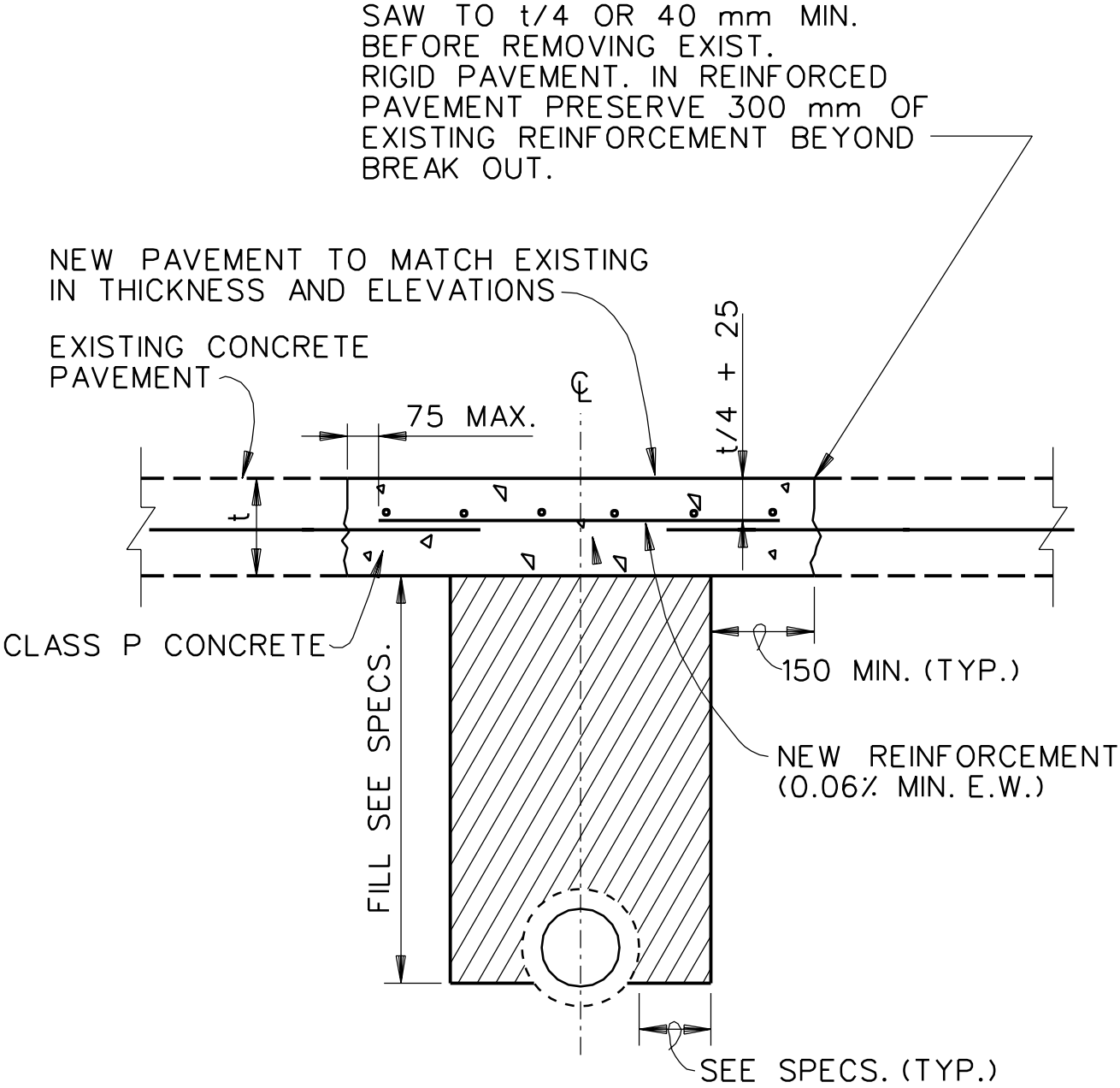

PAVEMENT REPLACEMENT DETAIL

(RIGID PAVEMENT)
N.T.S.

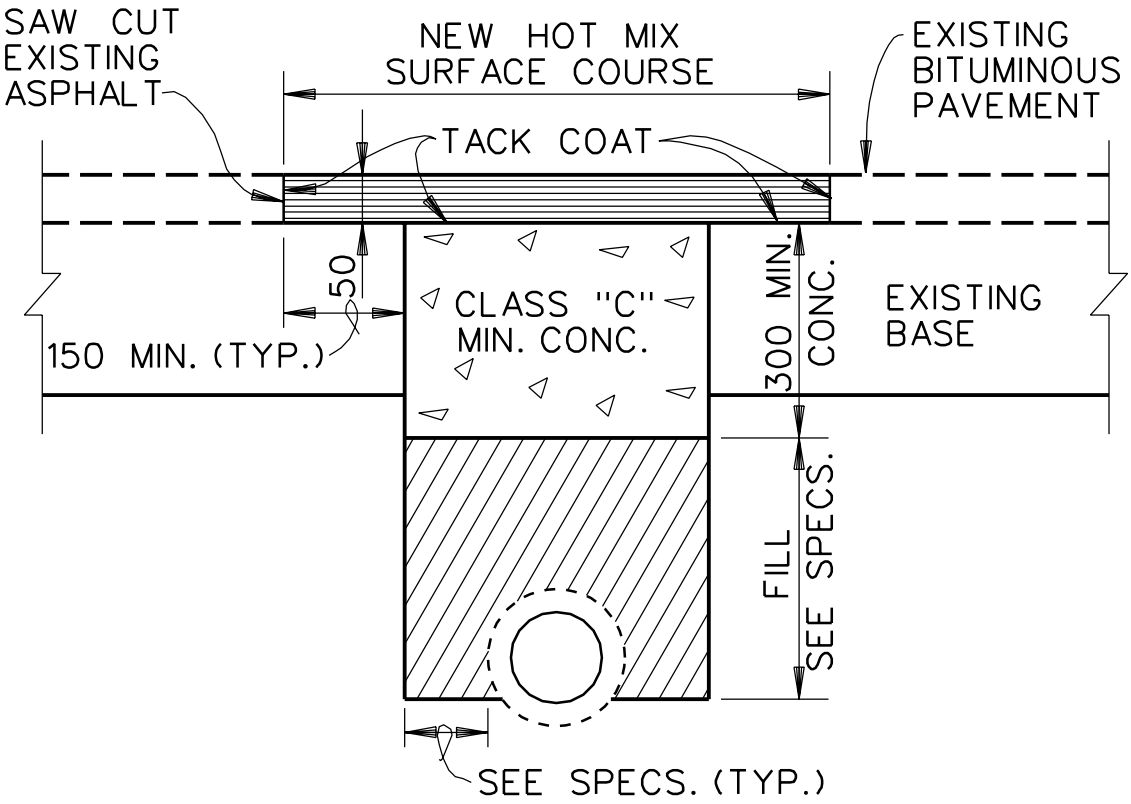

PAVEMENT REPLACEMENT DETAIL

(FLEXIBLE PAVEMENT)
N.T.S.

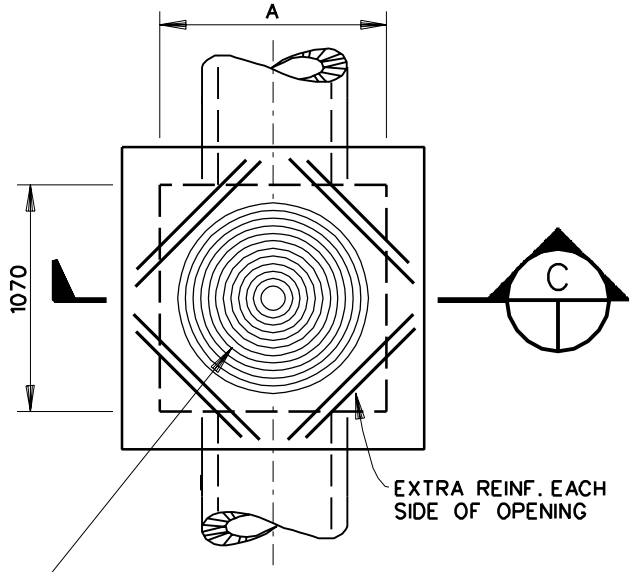

PLAN

CAST IRON MANHOLE FRAME AND COVER,
760 mm (30") DIA. OPENING, 1.8 kN TOTAL WEIGHT (LIGHT DUTY)
760 mm (30") DIA. OPENING, M 18 (H 20) WHEEL LOAD CAPACITY (HEAVY DUTY)
760 mm (30") DIA. OPENING, CAPACITY - UNIFORMLY DISTRIBUTED LOADS
OF 0.69 - 1.55 MPa (EXTRA HEAVY DUTY)

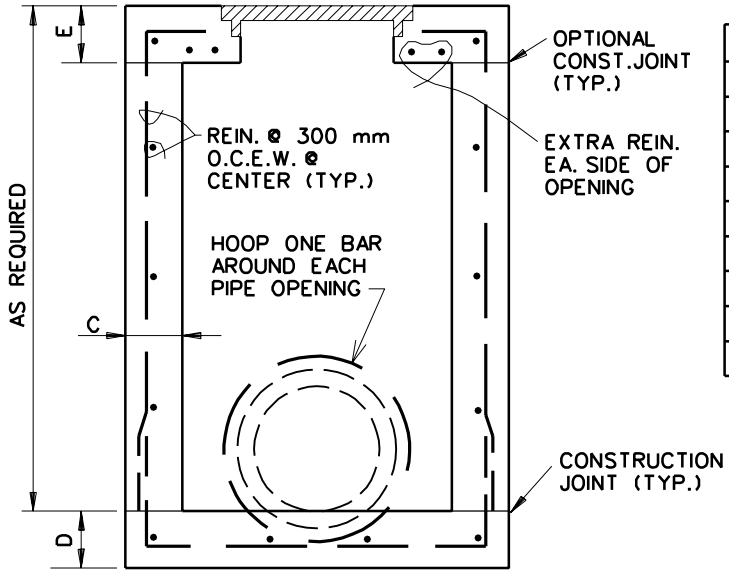

DIMENSION SCHEDULE	
PIPE SIZE	A
≤ 900 (36")	1220
1050 (42")	1370
1200 (48")	1520
1350 (54")	1680
1500 (60")	1830
1650 (66")	2130
1800 (72")	2290
2100 (84")	2590

SECTION C

DIMENSION SCHEDULE	C	D	E
NON-TRAFFIC AREA	150	200	200
UP TO 40 kN WHEEL LOAD	150	250	250
UP TO 110 kN WHEEL LOAD	200	250	300

NOTES:

1. CAST-IN-PLACE CONCRETE TO HAVE A MINIMUM ULTIMATE COMPRESSIVE STRENGTH OF 21 MPa (3000 psi) AT 28 DAYS.
2. HOOP ONE BAR AROUND ALL PIPE OPENINGS.
3. ALL LAPS AND EXTENSIONS OF REIN. TO BE 30 x DIAM. OF BAR.
4. STD. PRE-CAST MANHOLES MAY BE USED INSTEAD WHERE ECONOMICAL.

NOTES TO DESIGNER:

1. MANHOLE COVERS DESIGNATED "LIGHT" ARE FOR AREAS SUBJECT TO RESIDENTIAL TRAFFIC OR LESS.
2. MANHOLE COVERS DESIGNATED "HEAVY" ARE FOR AREAS SUBJECT TO TRAFFIC LOADS GREATER THAN RESIDENTIAL.
3. STEEL LADDER SHALL BE PROVIDED WHEN MANHOLE BECOMES DEEPER THAN 3660 mm BELOW FINISHED GRADE. (SEE SPECS.)
4. REINFORCEMENT BAR SIZE: NON-TRAFFIC •13
   WHEEL LOAD UP TO 40 kN •16
   WHEEL LOAD UP TO 110 kN •19

STORM DRAIN MANHOLE DETAILS

N.T.S.

PLATE C46

CAST IRON MANHOLE FRAME AND COVER ✳
760 mm (30") DIA. OPENING, 1.8 kN TOTAL WEIGHT (LIGHT DUTY)
760 mm (30") DIA. OPENING, M18 (H20) WHEEL LOAD CAPACITY (HEAVY DUTY)
760 mm (30") DIA. OPENING, CAPACITY - UNIFORMLY DISTRIBUTED LOADS OF 0.69 - 1.55 MPa (EXTRA HEAVY DUTY)

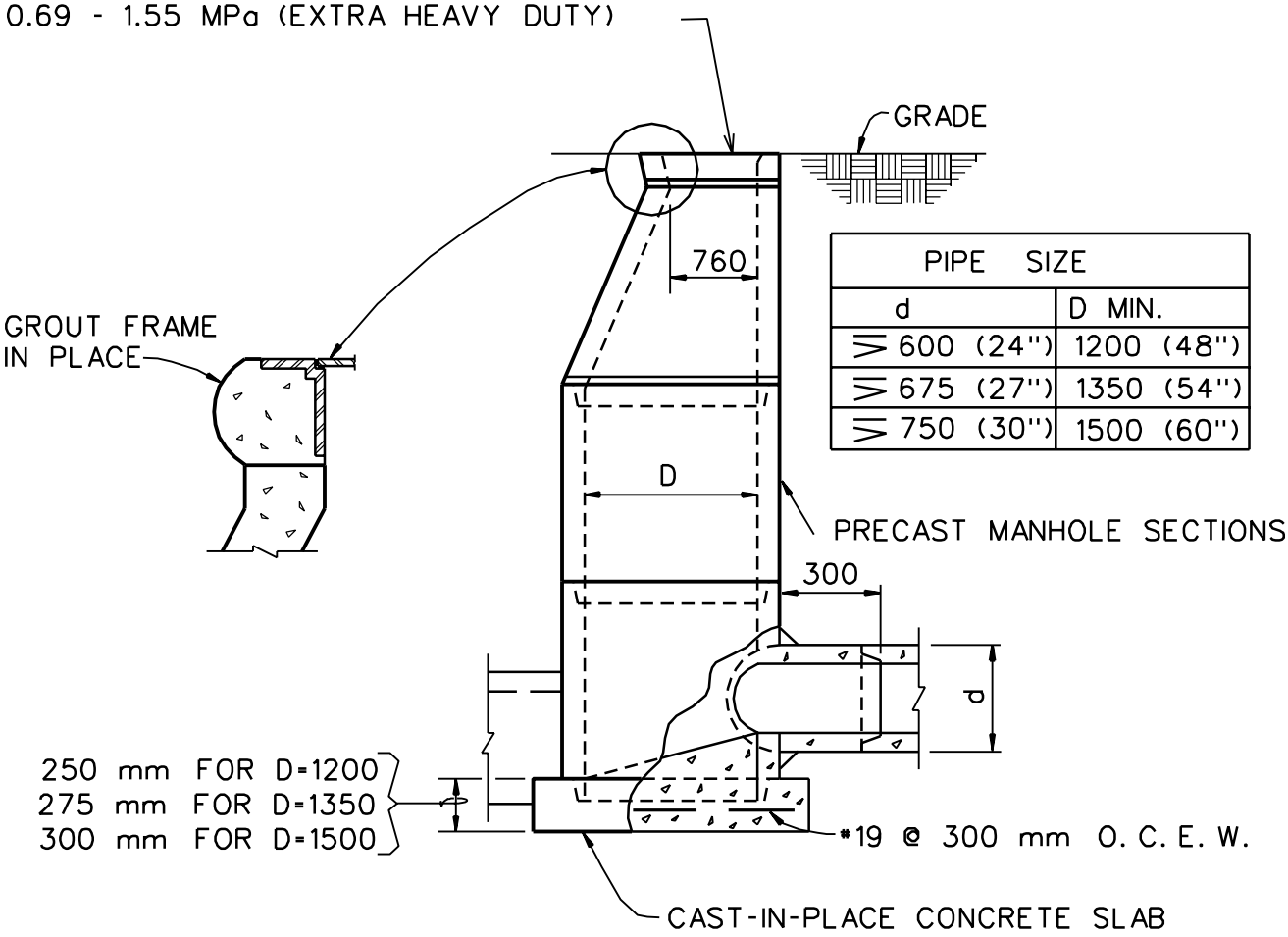

PIPE SIZE	
d	D MIN.
≥ 600 (24")	1200 (48")
≥ 675 (27")	1350 (54")
≥ 750 (30")	1500 (60")

PRECAST STORM DRAIN MANHOLE

N.T.S.

NOTE TO DESIGNER:

MONOLITHIC CONSTRUCTION OR FABRICATE AS DESCRIBED: WELD REINFORCING IN MAIN LINE PIPE TO THE MANHOLE CONNECTION, APPLY A RICH CEMENT MORTAR COATING.

✳ DESIGNER SHALL SELECT THE APPROPRIATE MANHOLE FRAME AND COVER.

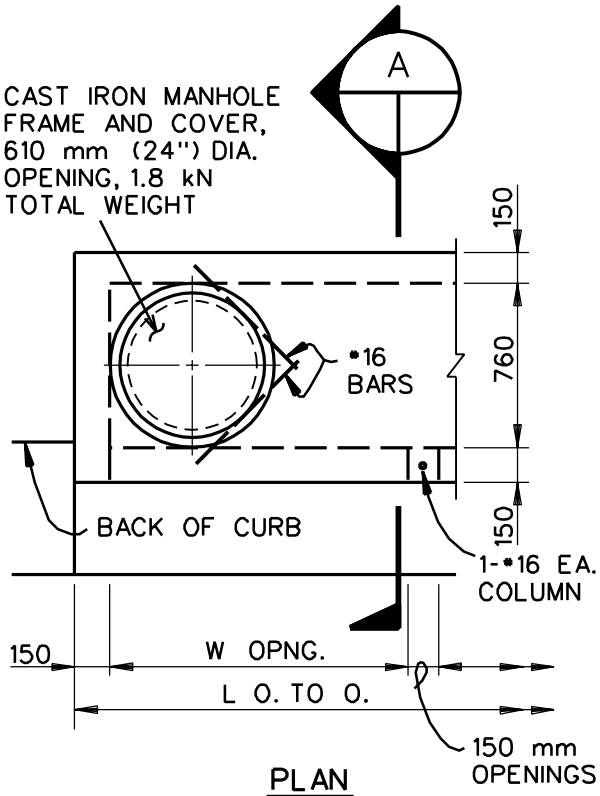

PLAN

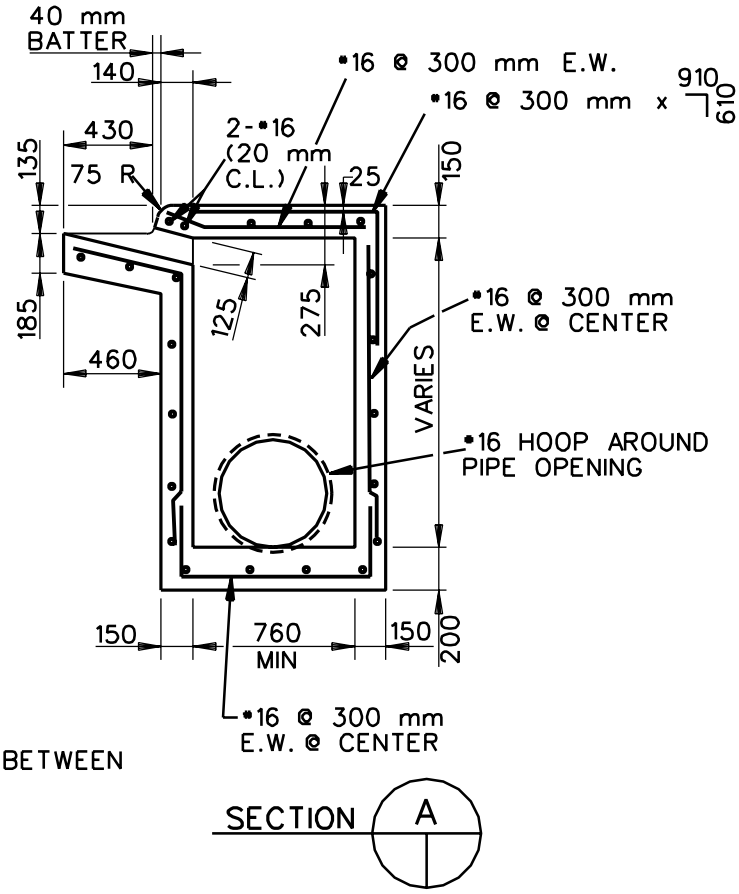

SECTION

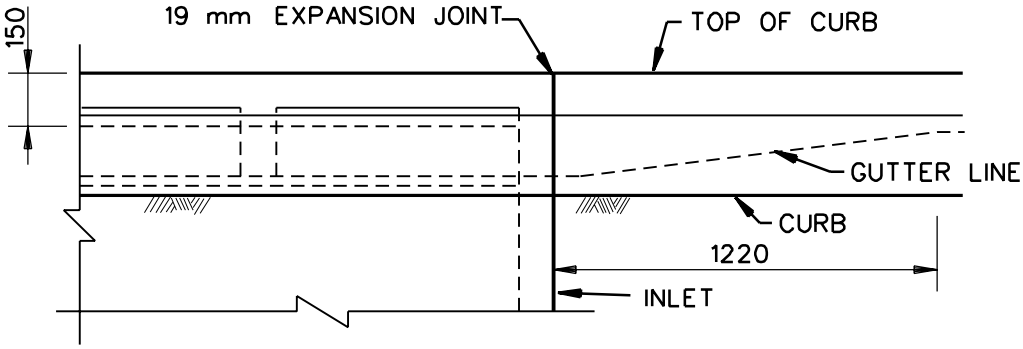

PART FRONT ELEVATION

TYPE	NO. OPNG	W	L
A	1	1220	1520
B	2	990	2440
C	3	810	3030
D	3	1020	3660

STANDARD CURB INLET DETAILS

(LIGHT DUTY)
N.T.S.

PLATE C48

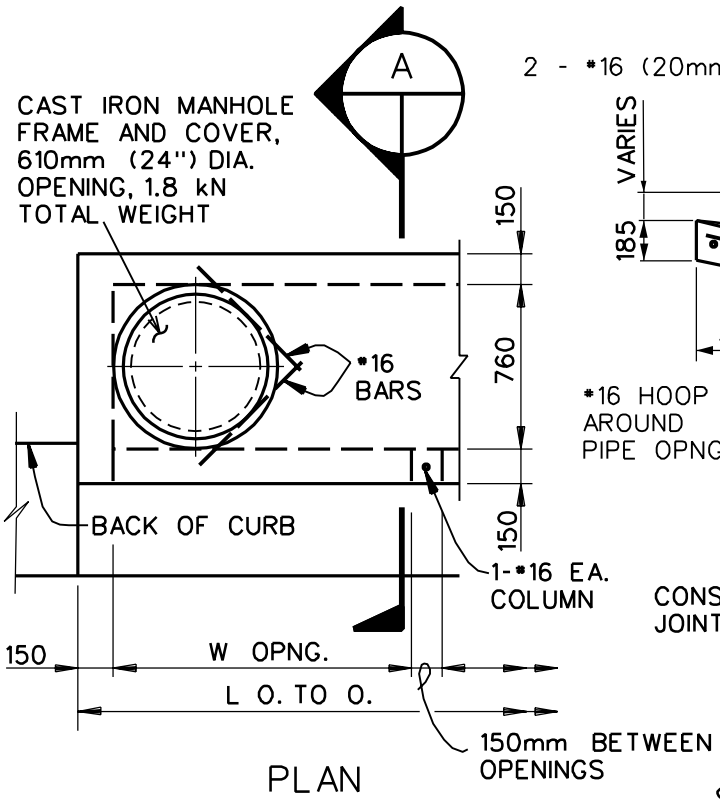

PLAN

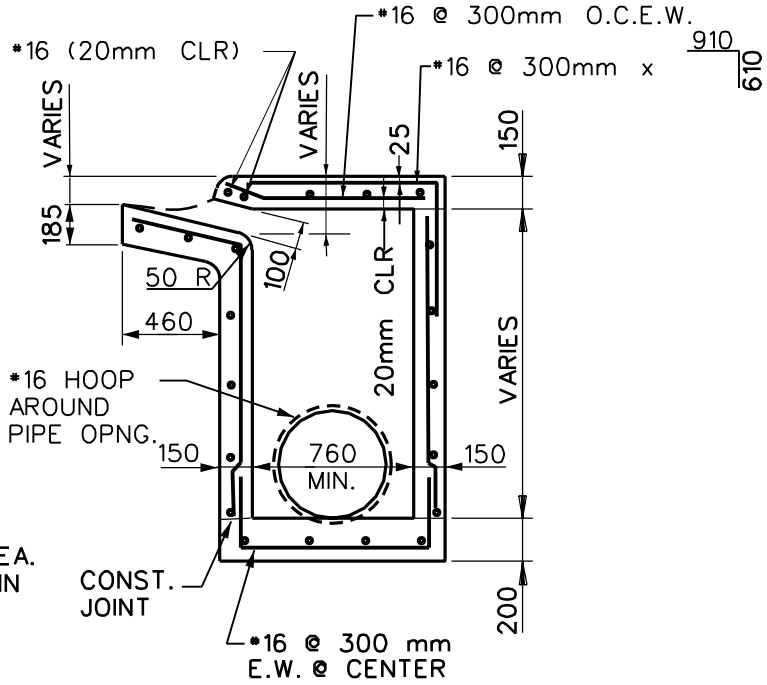

SECTION (TYP.) A

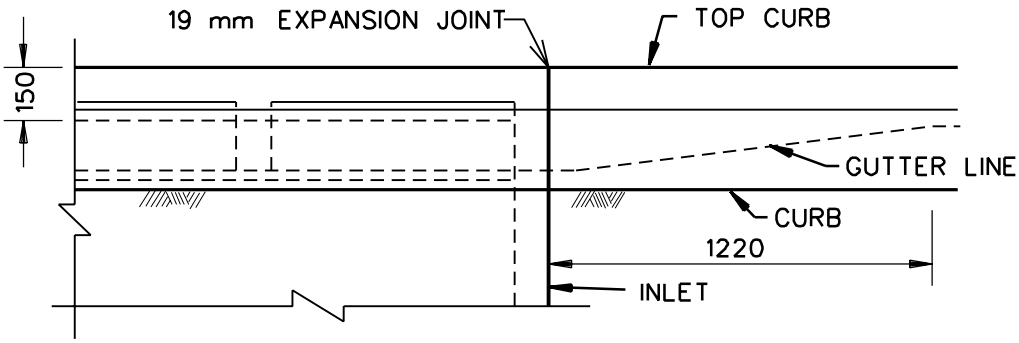

PART FRONT ELEVATION

TYPE	NO. OPNG	W	L
A	1	1220	1520
B	2	990	2440
C	3	810	3030
D	3	1020	3660

NOTE TO DESIGNER:

1. ADD DIMENSIONS AS NEEDED IN SECTION A-A TO CLARIFY FORMING INLET FOR THE APPLICABLE SIZE. (SEE MOUNTABLE CURB AND GUTTER DETAILS)

MOUNTABLE CURB INLET DETAILS

(LIGHT DUTY)
N.T.S.

PLATE C49

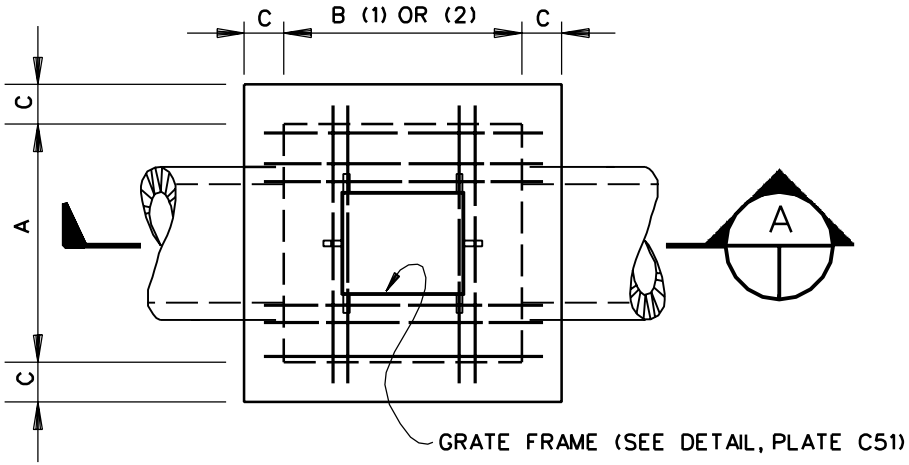

PLAN

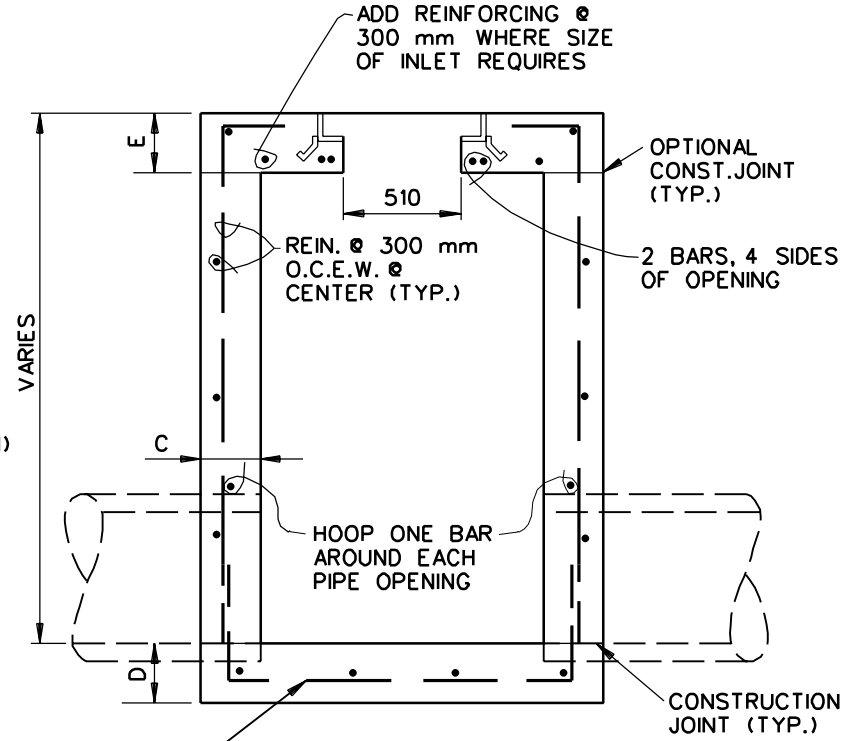

SECTION A

DIMENSION SCHEDULE			
PIPE SIZE	A	NUMBER OF GRATES	B
900 (36") OR LESS	1220	1	1220
1050 (42")	1370		
1200 (48")	1520	2	1830
1350 (54")	1680		
1500 (60")	1830		
1650 (66")	2130	3	2440
1800 (72")	2290		
2100 (84")	2590		

NOTES:

1. USE 21 MPa (3000 psi) CONCRETE.
2. ALL LAPS AND EXTENSIONS OF REINF. TO BE 30x DIAM. OF BAR.
3. STD. PRE-CAST SURFACE INLETS MAY BE USED INSTEAD WHERE ECONOMICAL.

DIMENSION SCHEDULE	C	D	E
NON-TRAFFIC AREA	150	200	200
UP TO 40 kN WHEEL LOAD	150	250	250
UP TO 110 kN WHEEL LOAD	200	250	300

NOTES TO DESIGNER:

1. WHERE PIPE IS REQUIRED FOR A "T" OR 4-WAY INTERSECTION, USE DIMENSION "A" UNDER DIMENSION SCHEDULE.
2. USE THE LARGER APPLICABLE DIMENSION OF "A" OR "B".
3. REINFORCEMENT BAR SIZE: NON-TRAFFIC #13
   WHEEL LOADS UP TO 40 kN #16
   WHEEL LOADS UP TO 110 kN #19

STANDARD SURFACE INLET

N.T.S.

PLATE C50

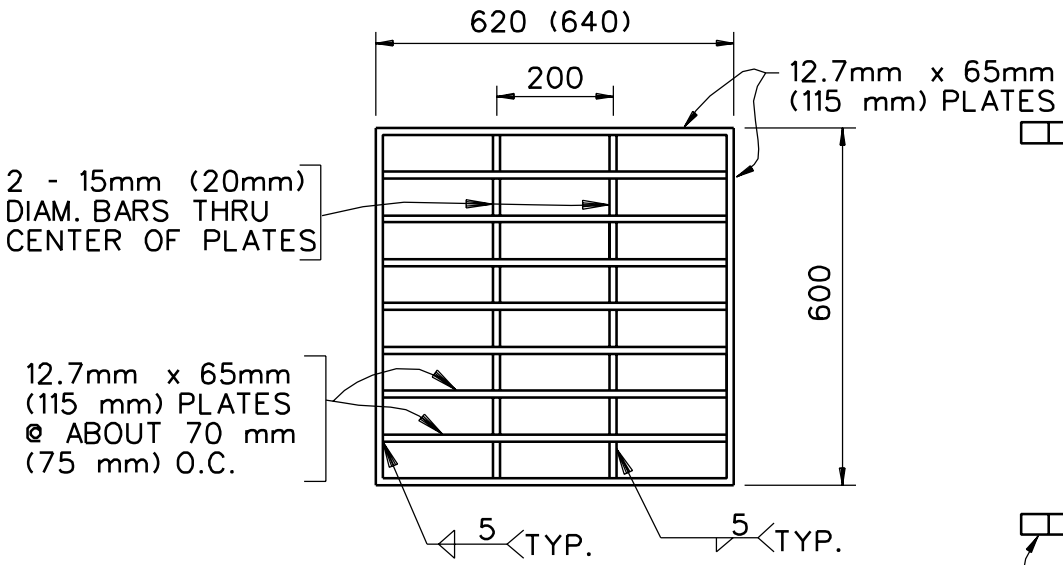

GRATE PLAN

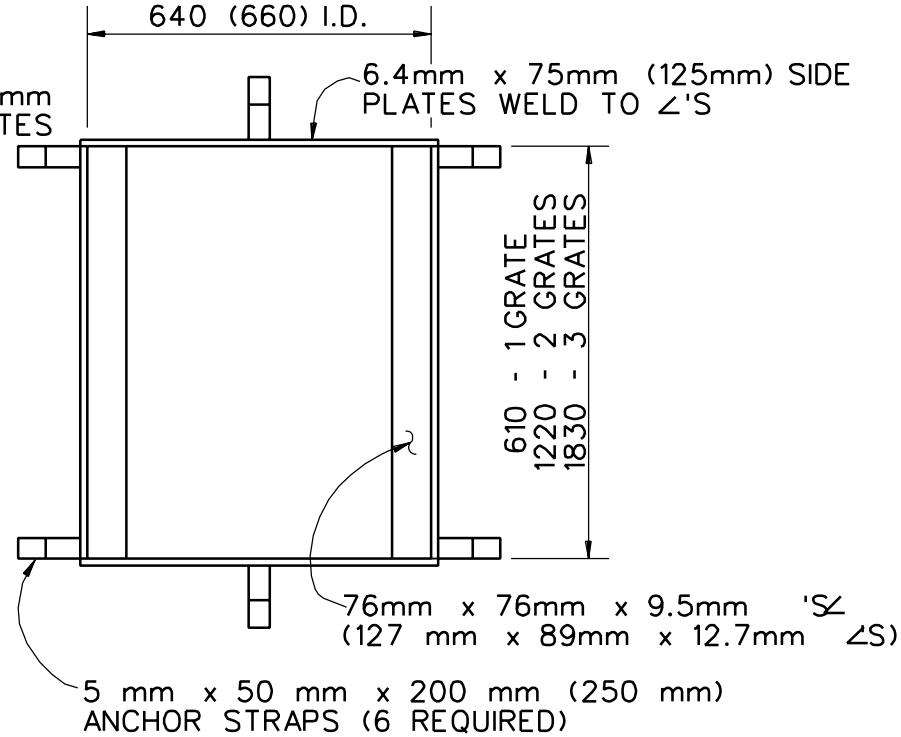

FRAME PLAN

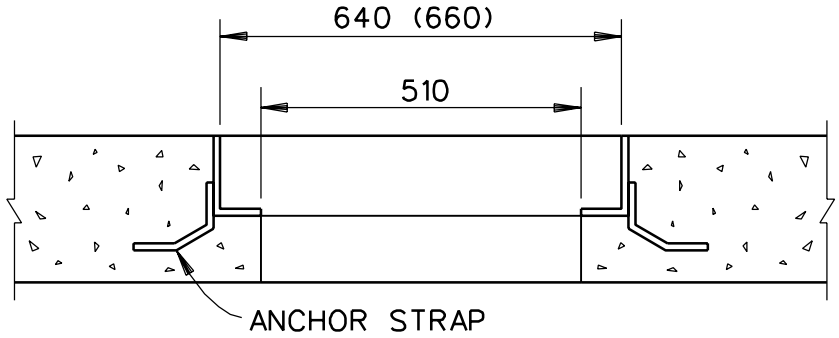

SECTION THRU INSTALLED FRAME

NOTES TO DESIGNER:

1. ALL DIMENSIONS APPLY TO NON-TRAFFIC, 4000kg, AND 11 300kg LOADING EXCEPT AS NOTED BY PARENTHESES.
2. DIMENSIONS IN PARENTHESES APPLY TO 110 kN LOADING ONLY.

SURFACE INLET GRATE AND FRAME

N.T.S.

PLATE C51

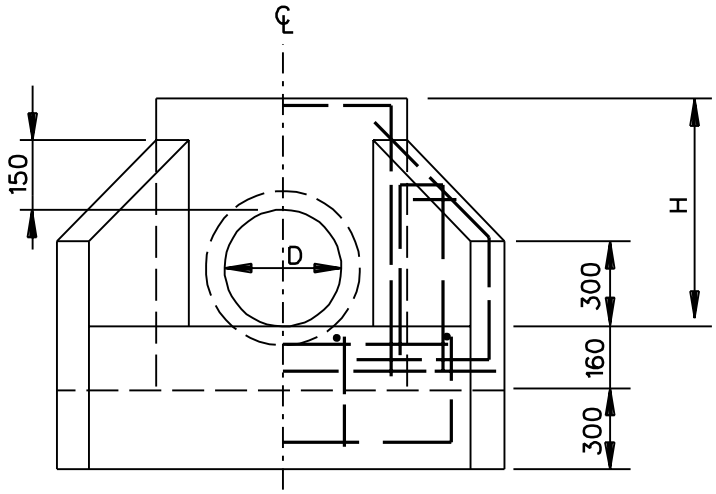

ELEVATION

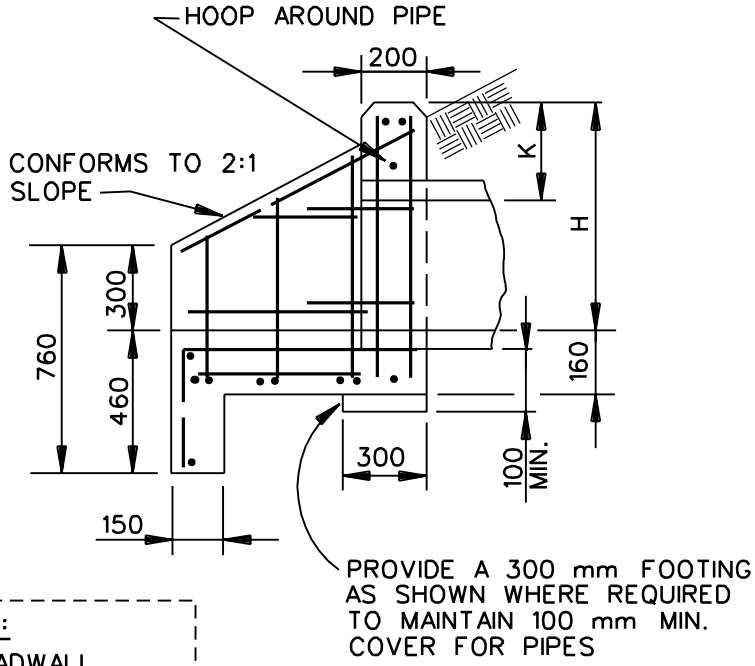

NOTE TO DESIGNER:

SEE CONCRETE HEADWALL TABLE OF DIMENSIONS FOR DIMENSIONS AND REINFORCEMENT ON PLATES NO. C54 AND C55.

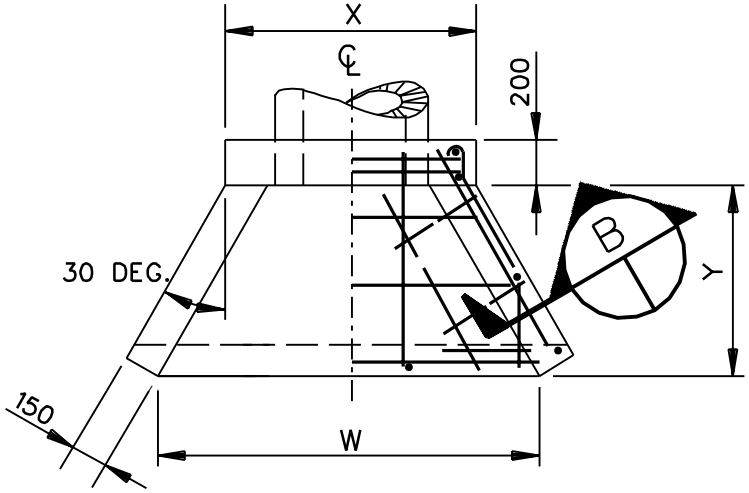

PLAN

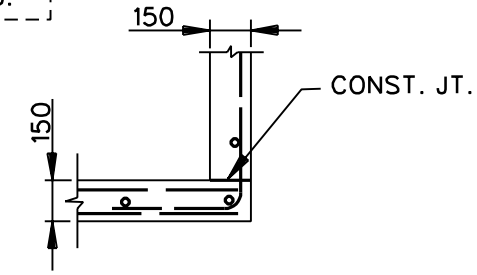

SECTION B

TYPE A CONCRETE HEADWALL

SINGLE PIPE - 90 DEG.
N.T.S.

NOTE TO DESIGNER
SEE PLATES C 54 AND C55 FOR DIMENSIONS AND REINFORCEMENT

PLATE C52

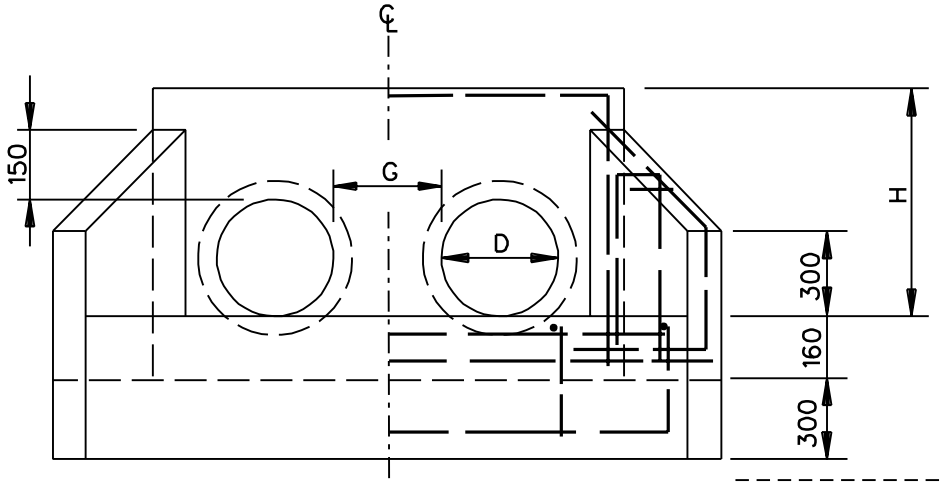

ELEVATION

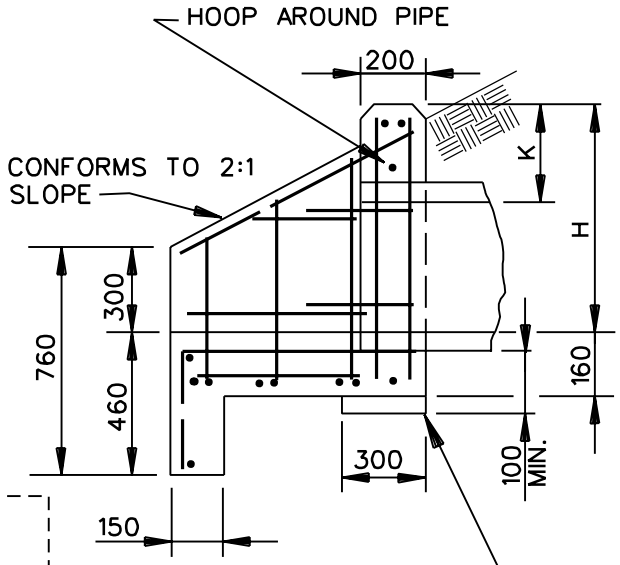

NOTE TO DESIGNER:
SEE CONCRETE HEADWALL TABLE OF DIMENSIONS FOR DIMENSIONS AND REINFORCEMENT ON ON PLATES NO. C54 AND C55.

PROVIDE A 300 mm FOOTING AS SHOWN WHERE REQUIRED TO MAINTAIN 100 mm MIN. COVER FOR PIPES

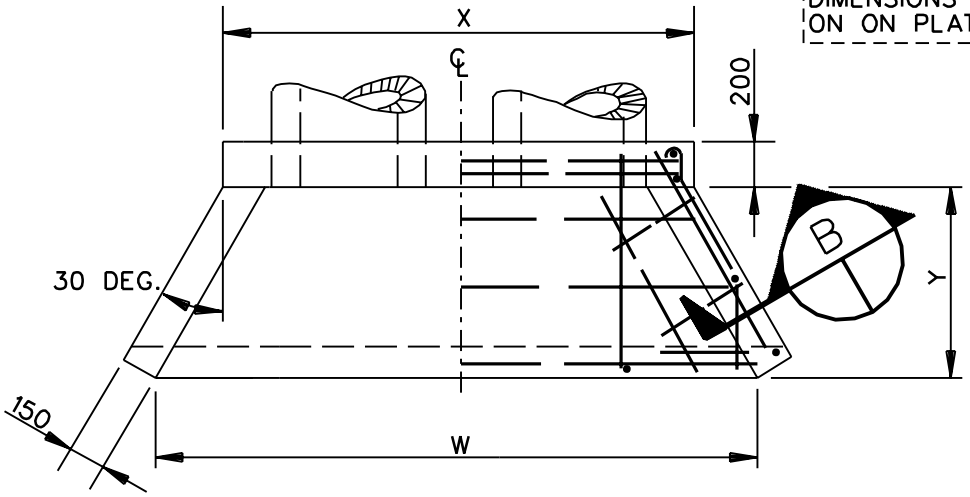

PLAN

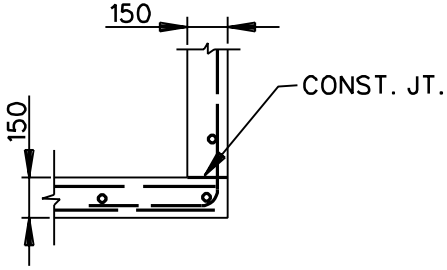

SECTION

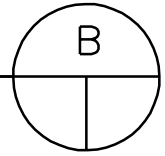

TYPE B CONCRETE HEADWALL

MULTIPLE PIPE - 90 DEG.
N.T.S.

NOTE TO DESIGNER
SEE PLATES C 54 AND C55 FOR DIMENSIONS AND REINFORCEMENT

PLATE C53

NO. OF PIPES	DIAM. OF PIPES	TABLE OF DIMENSIONS TYPE "A" AND "B"						
		G	K	X	H	Y	W	BAR SIZE *
1	300(12")	--	300	710	610	300	710	#10
2	"	250	"	1270	"	"	1270	"
3	"	"	"	1830	"	"	1830	"
4	"	"	"	2390	"	"	2390	"
1	380(15")	--	300	800	690	460	980	#10
2	"	300	"	1490	"	"	1660	"
3	"	"	"	2170	"	"	2350	"
4	"	"	"	2860	"	"	3040	"
1	450(18")	--	300	890	760	610	1240	#10
2	"	360	"	1700	"	"	2050	"
3	"	"	"	2510	"	"	2870	"
4	"	"	"	3330	"	"	3680	"
1	600(24")	--	300	1070	910	910	1770	#10
2	"	430	"	2110	"	"	2810	"
3	"	"	"	3150	"	"	3850	"
4	"	"	"	4190	"	"	4900	"
1	750(30")	--	300	1240	1070	1220	2300	#10
2	"	510	"	2510	"	"	3570	"
3	"	"	"	3780	"	"	4840	"
4	"	"		5050	"	"	6110	"
1	900(36")	--	300	1420	1220	1520	2830	#13
2	"	580	"	2920	"	"	4330	"
3	"	"	"	4420	"	"	5830	"
4	"	"	"	5920	"	"	7330	"

CONCRETE HEADWALL

FOR CONCRETE PIPE - 90° - SINGLE AND MULTIPLE PIPES

* - REINFORCING BARS AT 300 mm O.C.E.W.

PLATE C54

NO. OF PIPES	DIAM. OF PIPES	TABLE OF DIMENSIONS TYPE "A" AND "B"						
		G	K	X	H	Y	W	BAR SIZE *
1	1050(42")	--	300	1600	1370	1830	3360	#13
2	"	660	"	3330	"	"	5090	"
3	"	"	"	5050	"	"	6810	"
4	"	"	"	6780	"	"	8540	"
1	1200(48")	--	380	1780	1600	2130	3890	#13
2	"	740	"	3730	"	"	5850	"
3	"	"	"	5690	"	"	7800	"
4	"	"	"	7650	"	"	9760	"
1	1350(54")	--	380	1960	1750	2440	4420	#13
2	"	610	"	4190	"	"	6650	"
3	"	"	"	6430	"	"	8890	"
4	"	"	"	8660	"	"	11 130	"
1	1500(60")	--	380	2130	1910	2740	4950	#13
2	"	910	"	4570	"	"	7390	"
3	"	"	"	7010	"	"	9830	"
4	"	"	"	9450	"	"	12 270	"
1	1650(66")	--	380	2310	2060	3050	5480	#16
2	"	940	"	4930	"	"	8100	"
3	"	"	"	7540	"	"	10 710	"
4	"	"	"	10 160	"	"	13 330	"
1	1800(72")	--	380	2490	2210	3350	6010	#16
2	"	970	"	5280	"	"	8800	"
3	"	"	"	8080	"	"	11 600	"
4	"	"	"	10 870	"	"	14 390	"

CONCRETE HEADWALL

FOR CONCRETE PIPE - 90° - SINGLE AND MULTIPLE PIPES

* - REINFORCING BARS AT 300 mm O.C.E.W.

PLATE C55

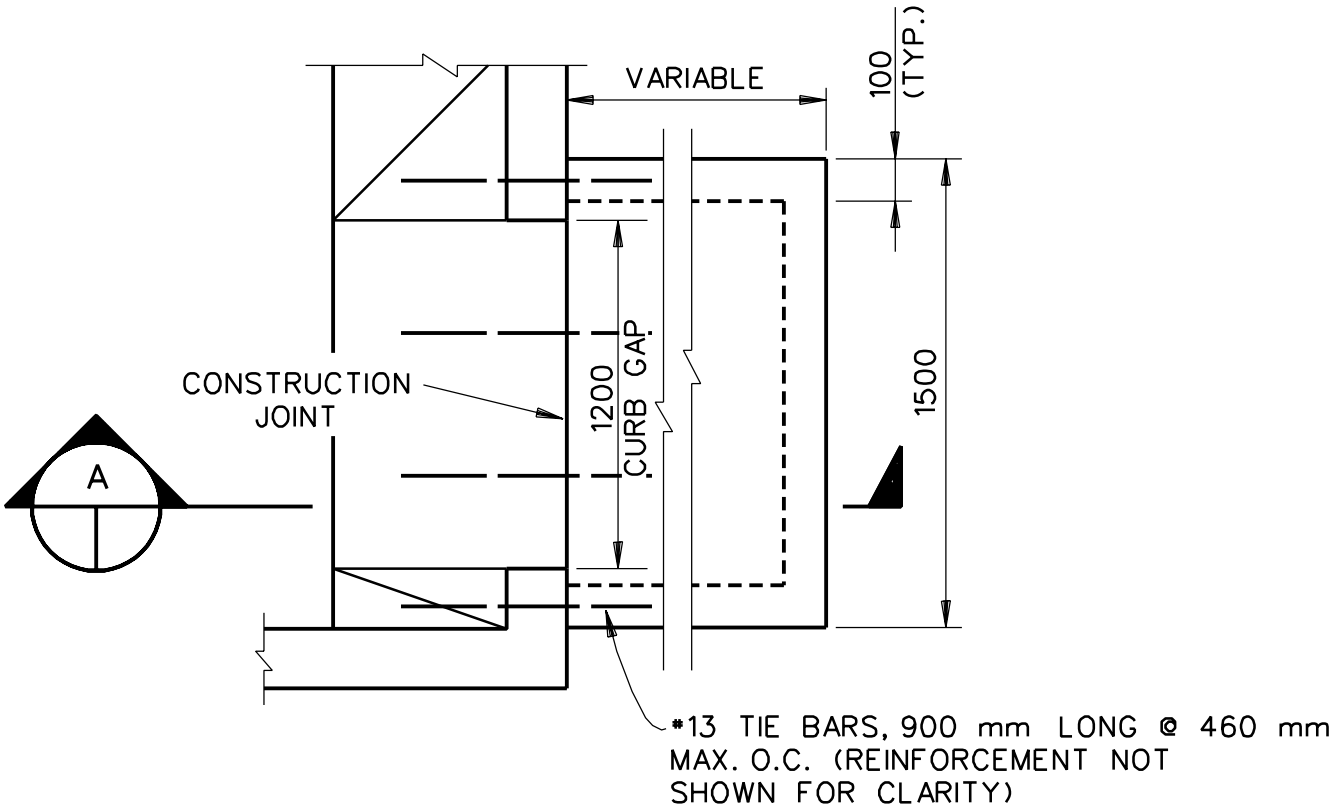

PLAN

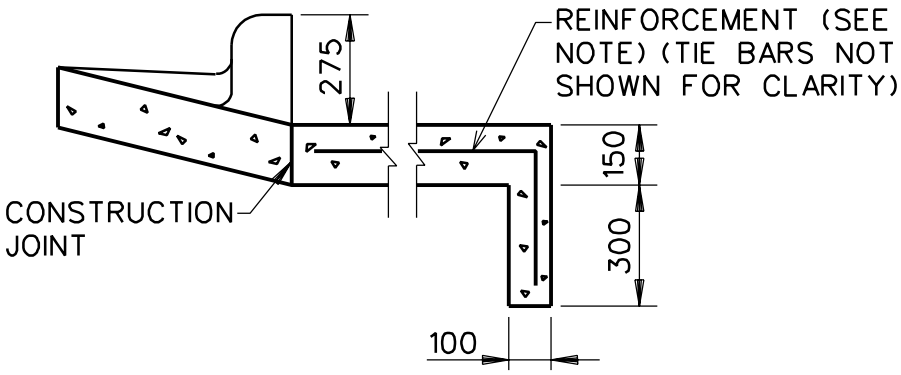

SECTION A

CURB GAP WITH PAD

N.T.S.

NOTE TO DESIGNER:

REINFORCEMENT TO BE 0.20% TIMES THE CROSS SECTIONAL AREA, EACH WAY.

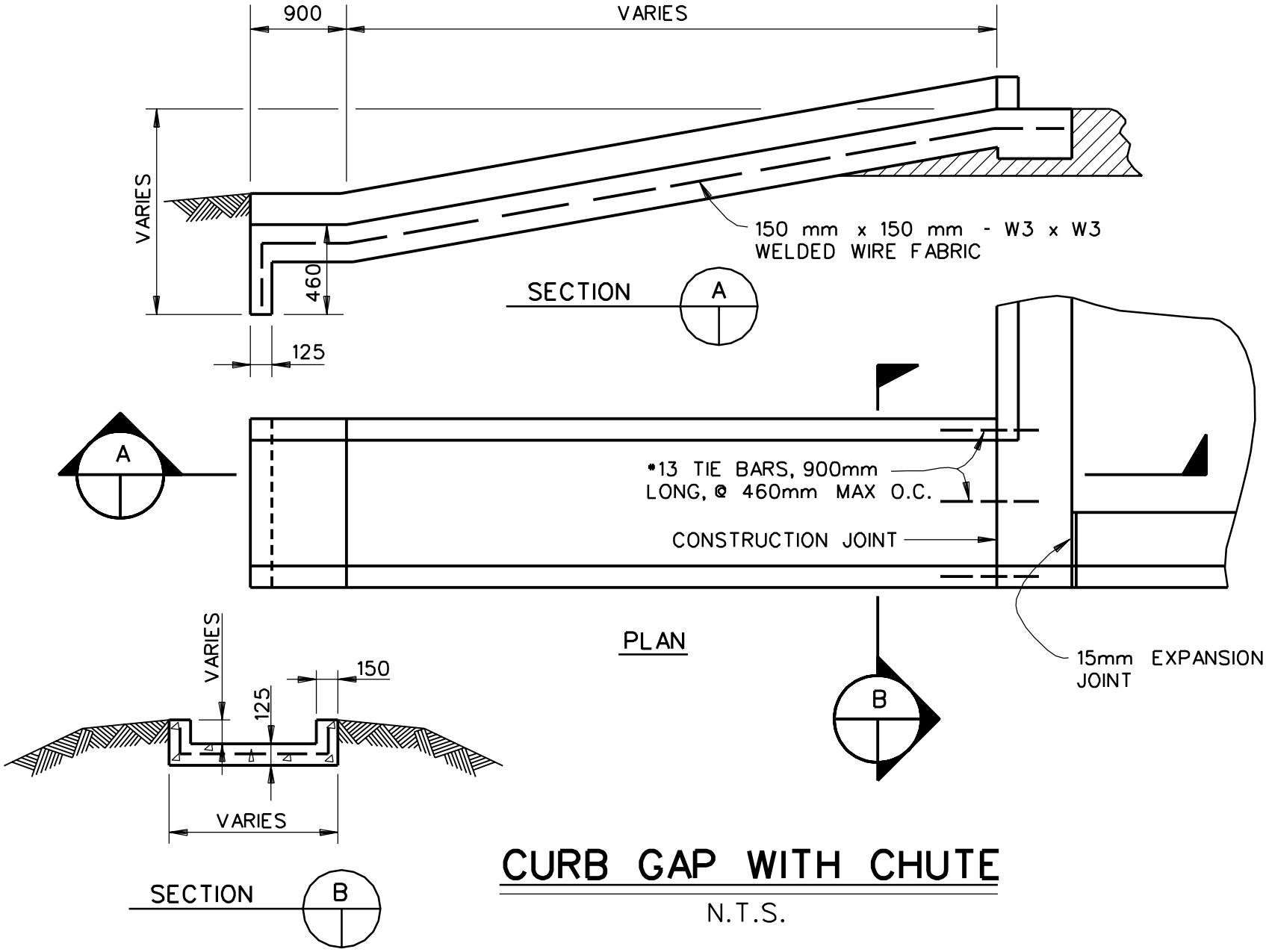

CURB GAP WITH CHUTE

N.T.S.

PLATE C57

SANITARY MANHOLE NOTES:

1. CAST-IN-PLACE CONCRETE TO HAVE MINIMUM ULTIMATE COMPRESSIVE STRENGTH OF 28 MPa AT 28 DAYS.
2. ALL LAPS AND EXTENSIONS OF REINFORCING BARS SHALL BE 30 x DIAM. OF BARS MIN. EXCEPT AS OTHERWISE NOTED.

NOTES TO DESIGNER:

1. MANHOLE COVERS DESIGNATED "LIGHT" ARE FOR AREAS SUBJECT TO RESIDENTIAL TRAFFIC OR LESS.
2. MANHOLE COVERS DESIGNATED "HEAVY" ARE FOR AREAS SUBJECT TO TRAFFIC LOADS GREATER THAN RESIDENTIAL.
3. STEEL LADDER SHALL BE PROVIDED WHEN MANHOLE BECOMES DEEPER THAN 3600 mm BELOW FINISHED GRADE. (SEE SPECS.)
4. GROUT WILL BE PLACED IN SANITARY SEWER MANHOLES AS INDICATED ON THIS DRAWING. NOT REQUIRED IN STORM SEWER MANHOLES.
5. DETAILS FOR CAST-IN-PLACE OPTION AND BOTH PRECAST OPTIONS WILL BE INCLUDED IN ALL PROJECTS.
6. DETAILS OF DROP-TYPE CONNECTION MANHOLE WILL BE INCLUDED AS APPLICABLE.
7. THE "NOTES FOR MANHOLE" ABOVE SHALL APPEAR WITH THE MANHOLE DETAILS ON ALL PROJECTS.

SANITARY MANHOLE NOTES

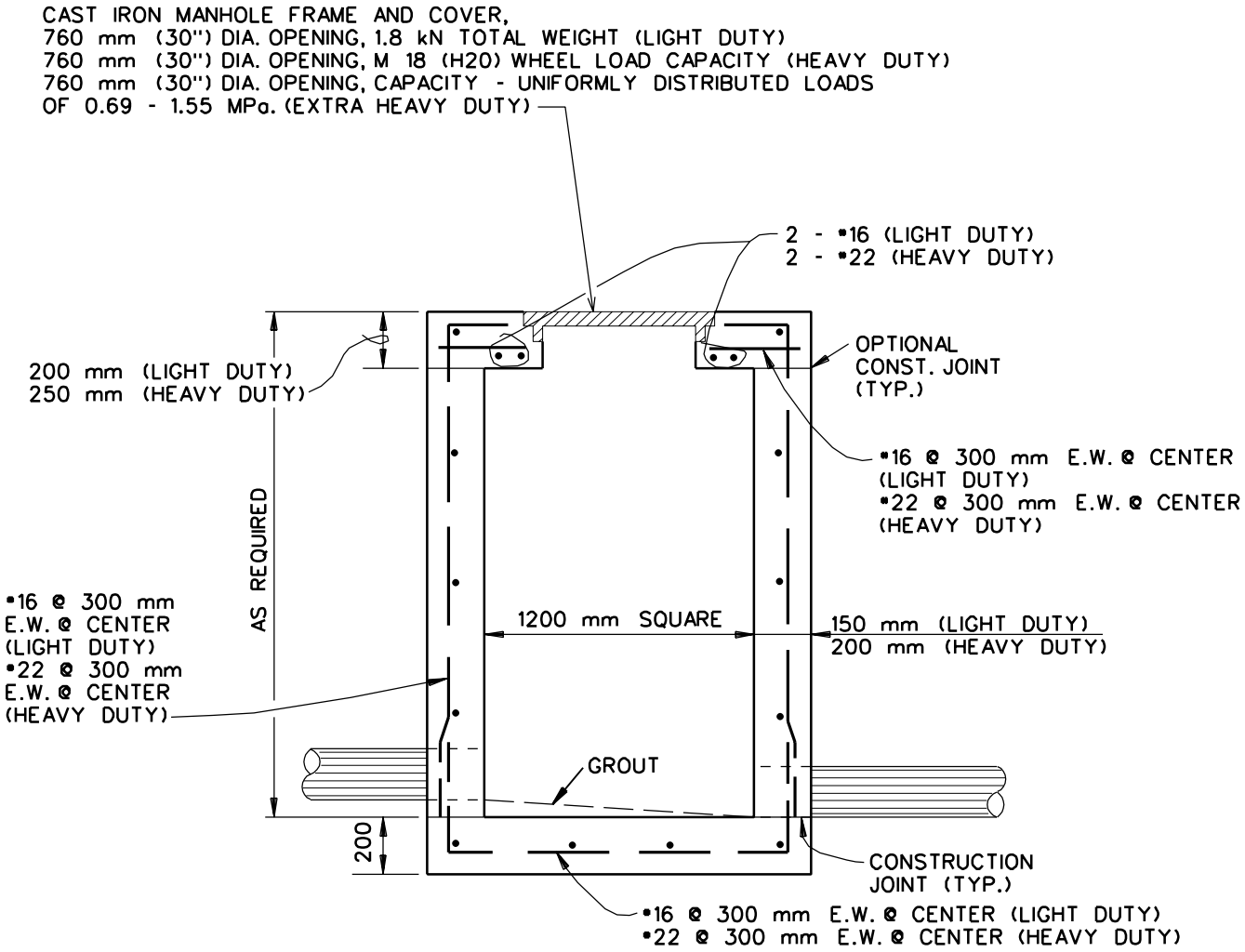

SECTION

CAST-IN-PLACE REINF. CONCRETE OPTION

SANITARY SEWER MANHOLE DETAILS

N.T.S.

NOTE TO DESIGNER:

SLECT APPROPRIATE STRENGTH FOR MANHOLE COVER AND CONCRETE WALL THICHNESS AND REINFORCEMENT SIZE.

PLATE C59

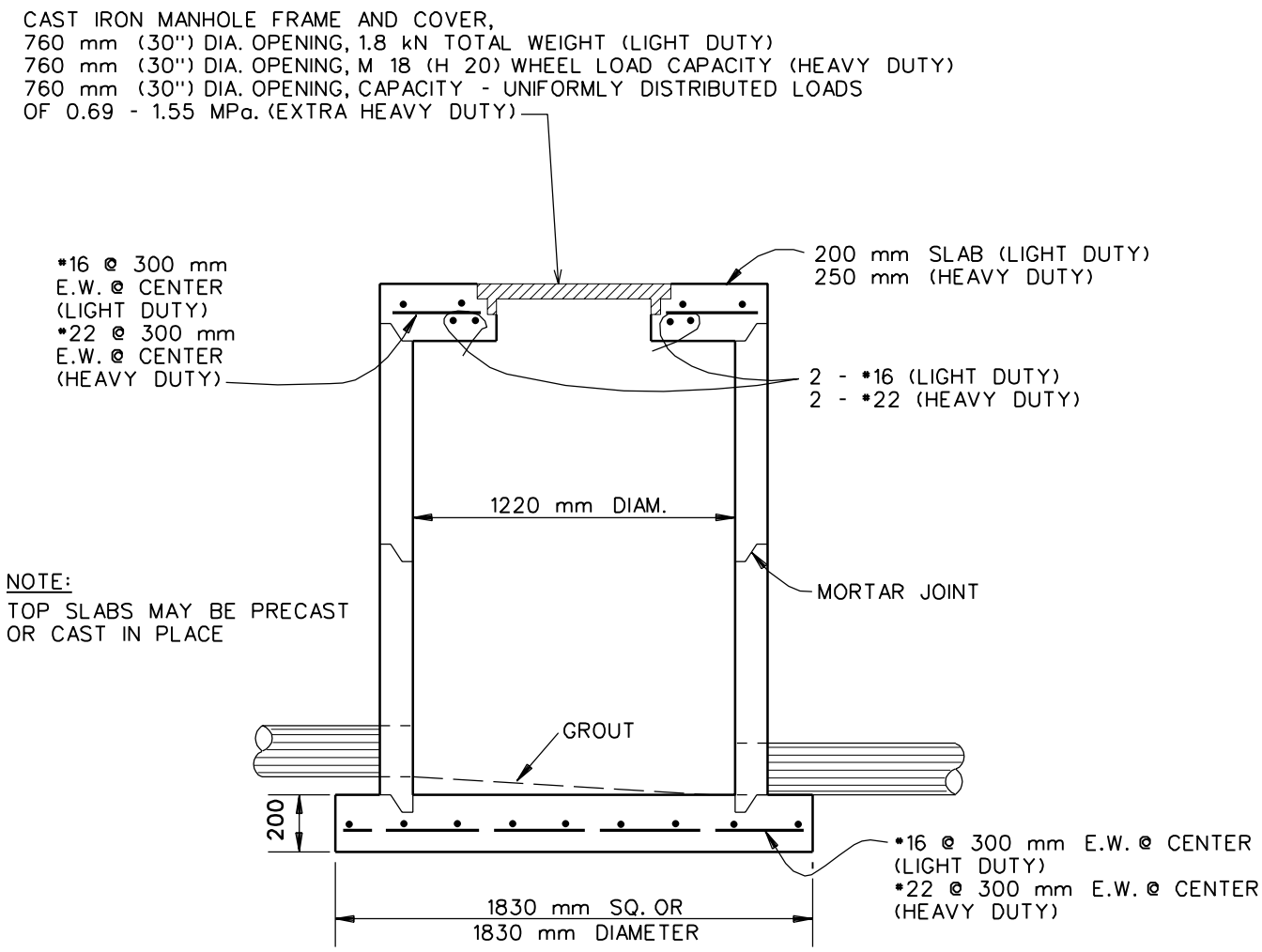

NOTE:

TOP SLABS MAY BE PRECAST OR CAST IN PLACE

SECTION

PRECAST CONCRETE OPTION

SANITARY SEWER MANHOLE DETAILS

N.T.S.

NOTE TO DESIGNER:

SELECT APPROPRIATE STRENGTH FOR MANHOLE COVER AND CONCRETE WALL THICKNESS AND REINFORCEMENT SIZE.

PLATE C60

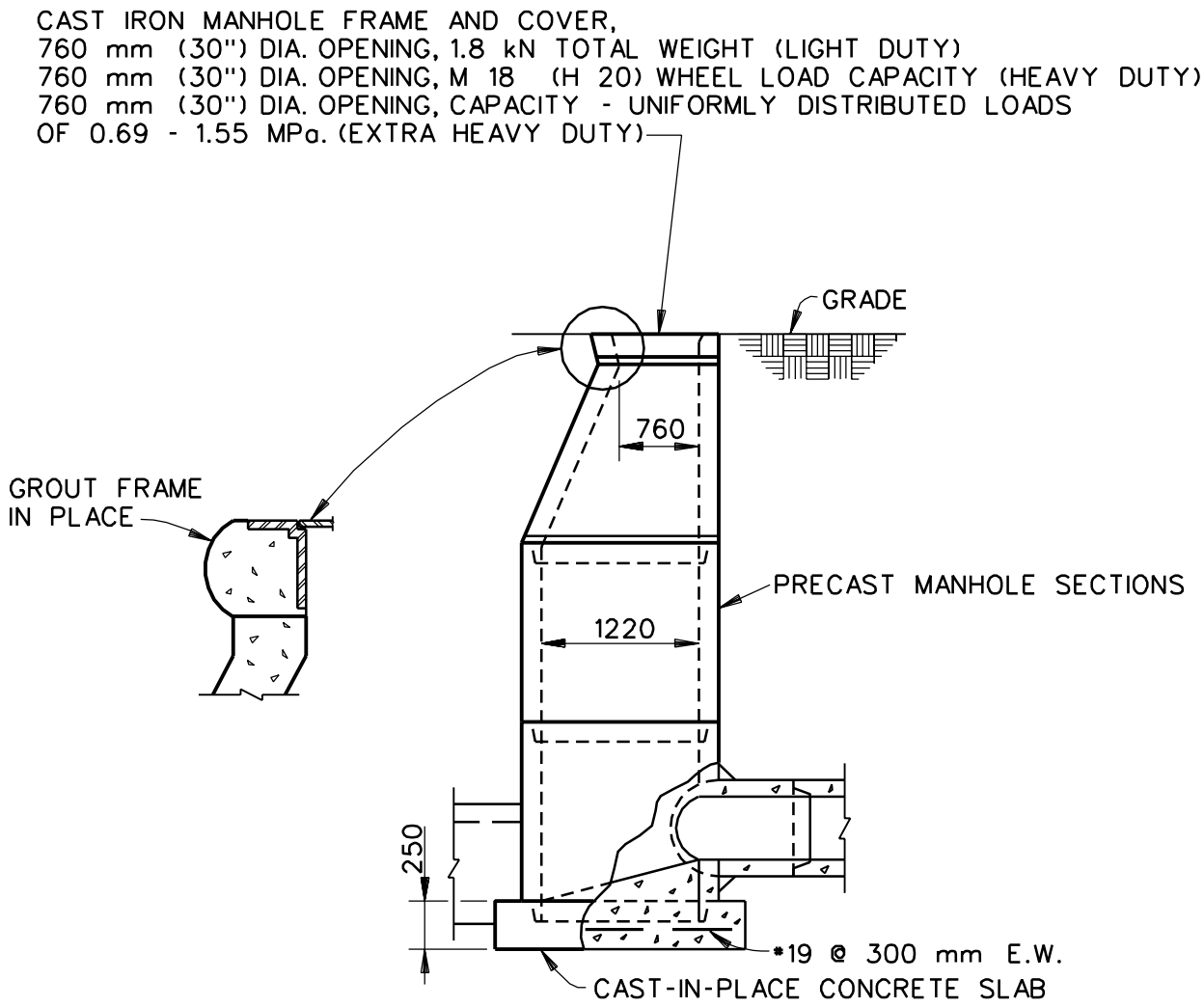

ALTERNATE PRECAST MANHOLE OPTION

SANITARY SEWER MANHOLE DETAILS

N.T.S.

PLATE C61

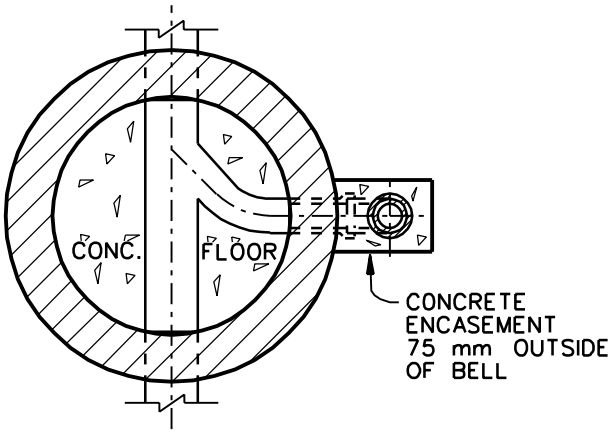

SECTION

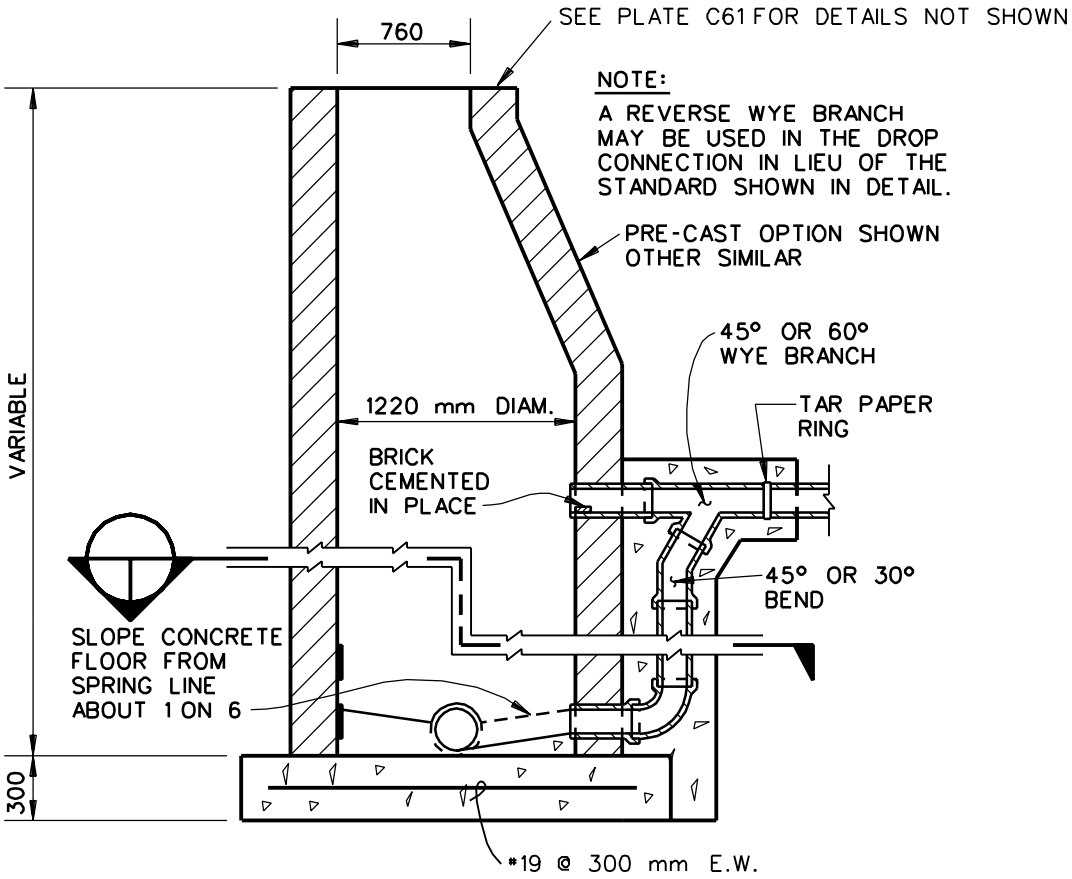

TYPICAL SECTION - DROP TYPE SEWER CONNECTION

N.T.S.

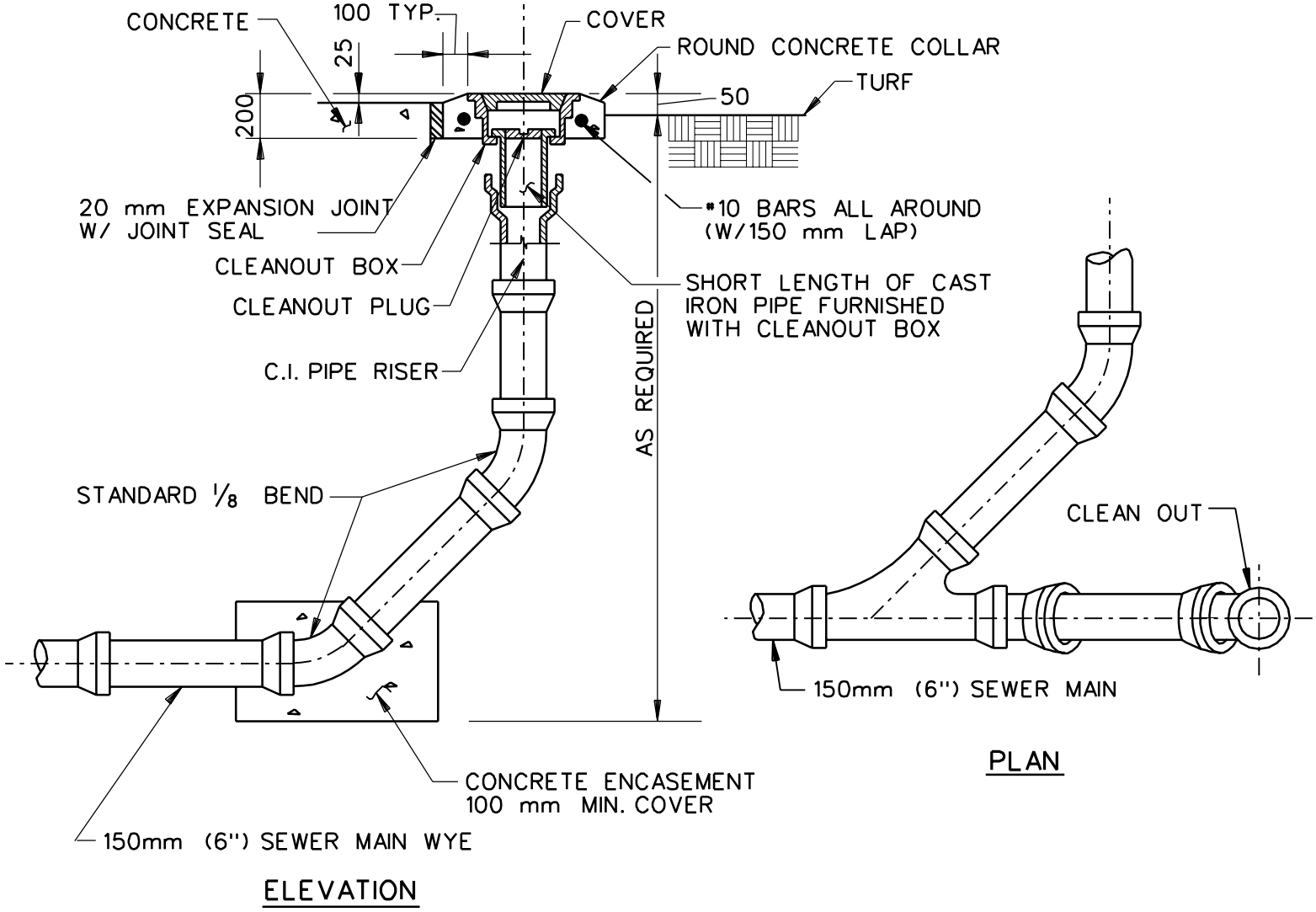

TYPICAL CLEANOUT

N.T.S.

PLATE C63

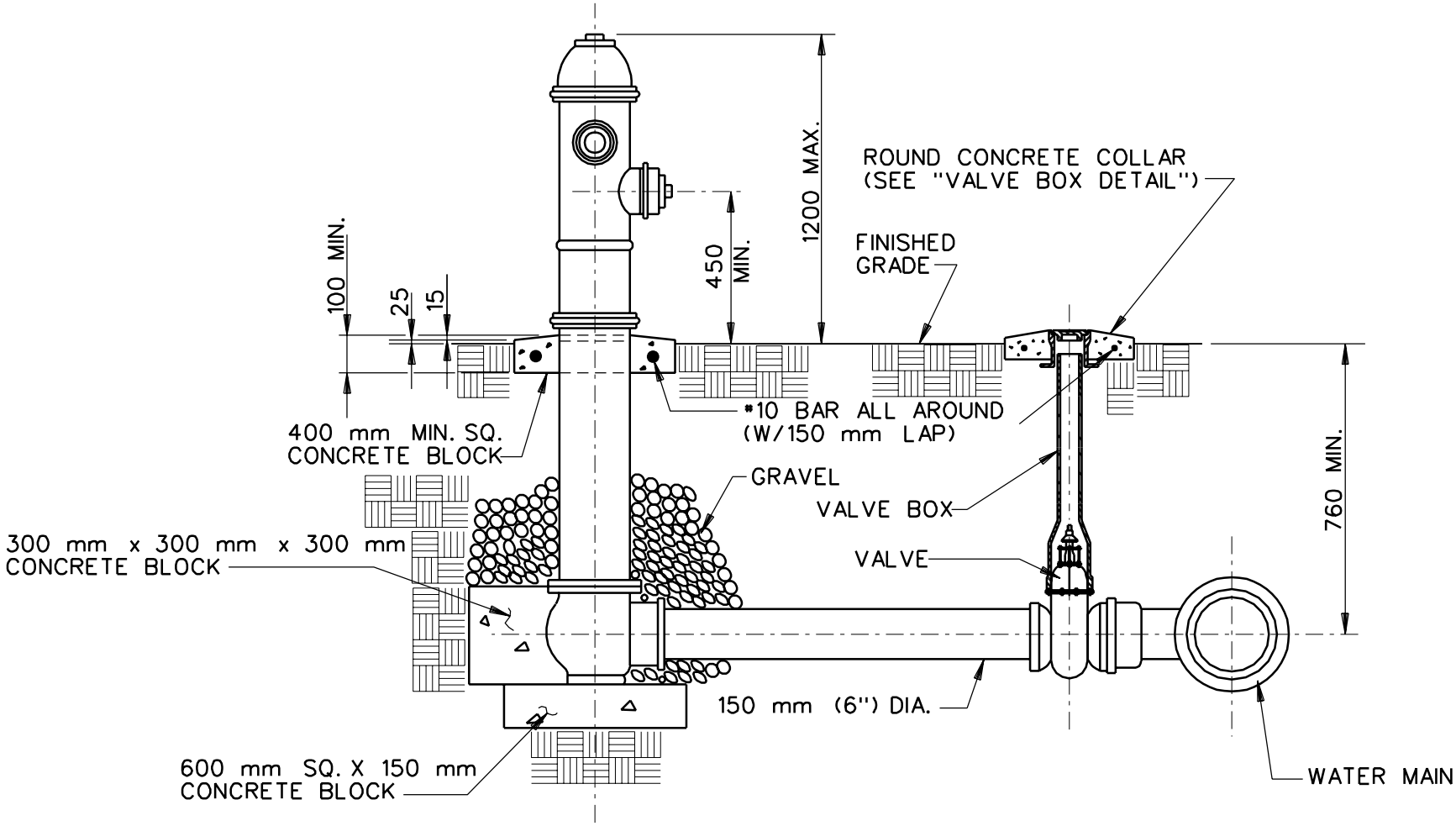

TYPICAL FIRE HYDRANT SETTING

N.T.S.

PLATE C64

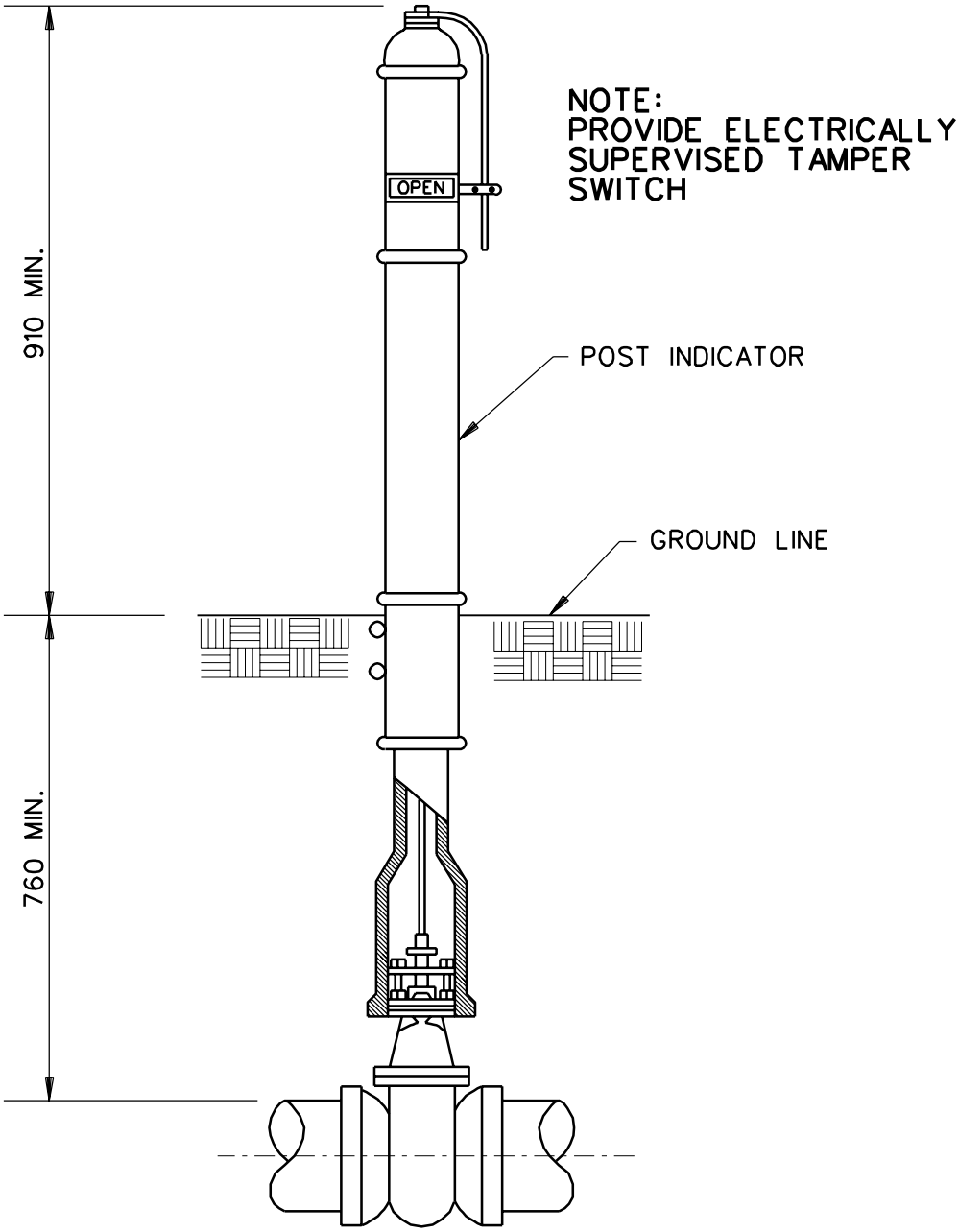

POST INDICATOR VALVE DETAIL

N.T.S.

PLATE C65

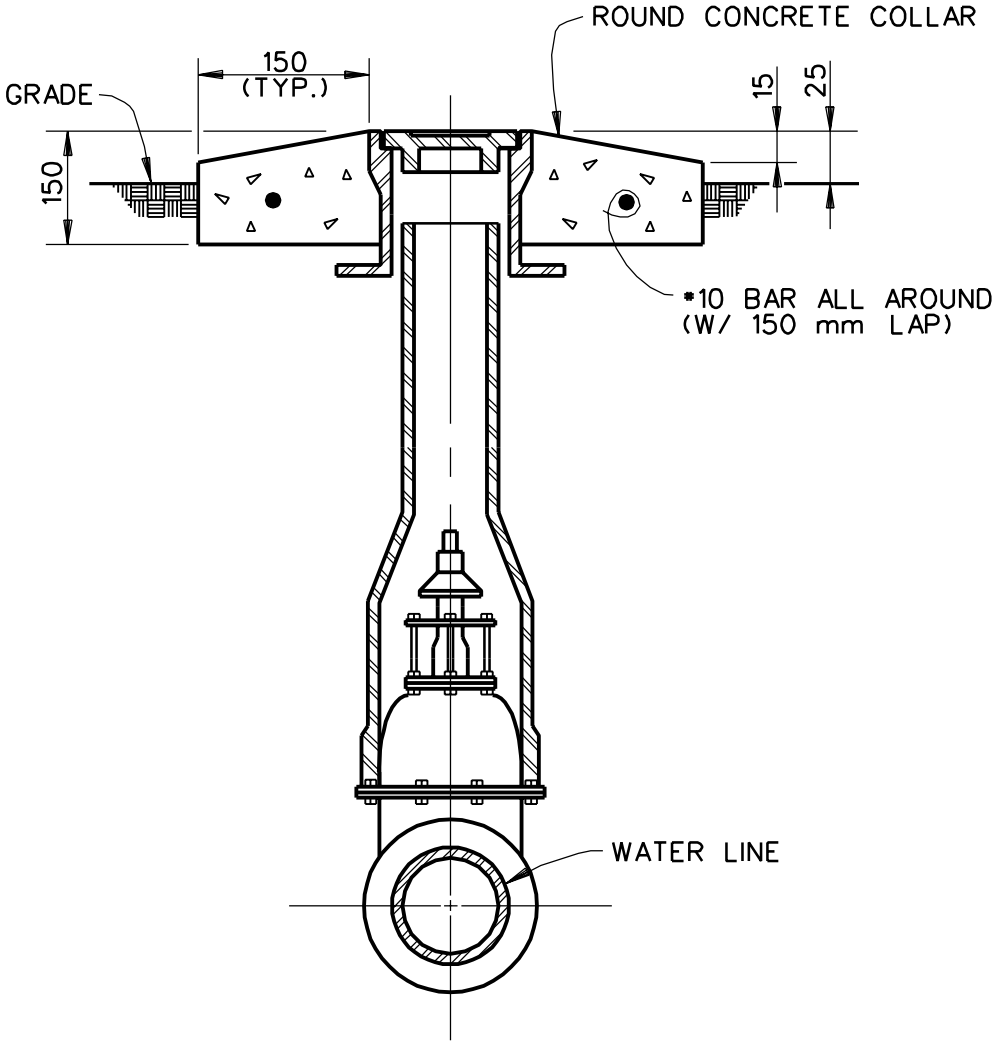

DETAIL - VALVE BOX

N.T.S.

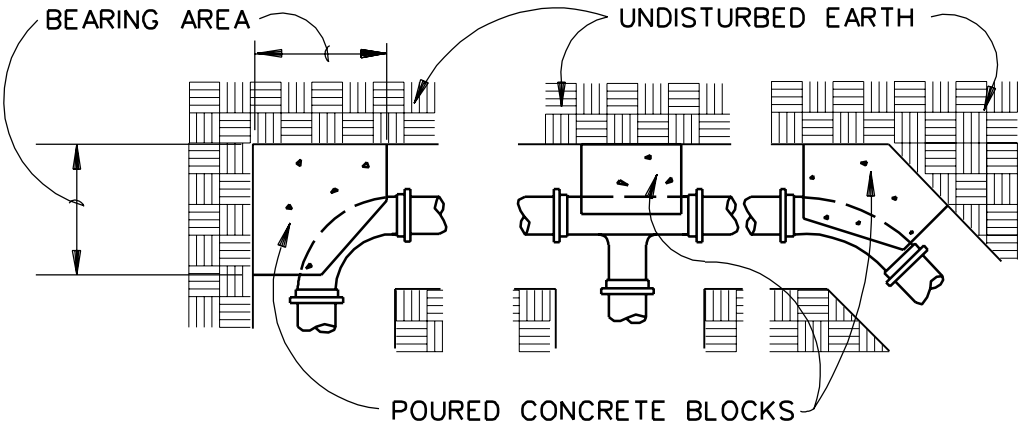

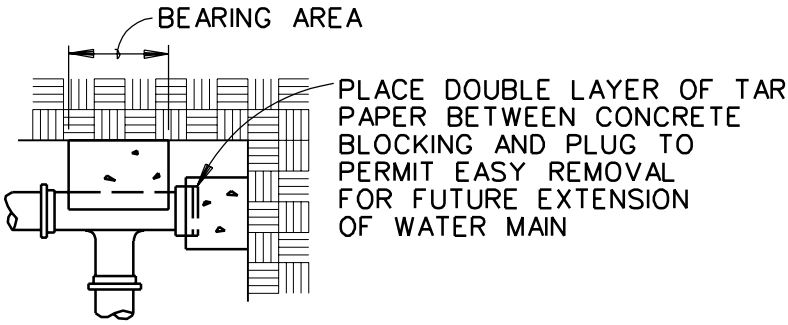

BEARING AREA OF BLOCK IN SQUARE METERS					
FITTING SIZES	TEE & END	90 DEG. BEND	45 DEG. BEND	22½DEG. BEND	11¼DEG. BEND
150 (6")	0.33	0.50	0.23	0.14	0.07
200 (8")	0.59	0.83	0.45	0.23	0.12
250 (10")	0.92	1.29	0.71	0.36	0.19
300 (12")	1.32	1.86	1.01	0.52	0.26

NOTE TO DESIGNER:

AREAS BASED ON PIPE BURST PRESSURE OF 1.72 MPa

SOIL BEARING PRESSURE	MULTIPLIER
50 kPa	2.0
75 kPa	1.33
100 kPa	1.0
150 kPa	0.67

THRUST BLOCK DETAILS

N.T.S.

PLATE C67

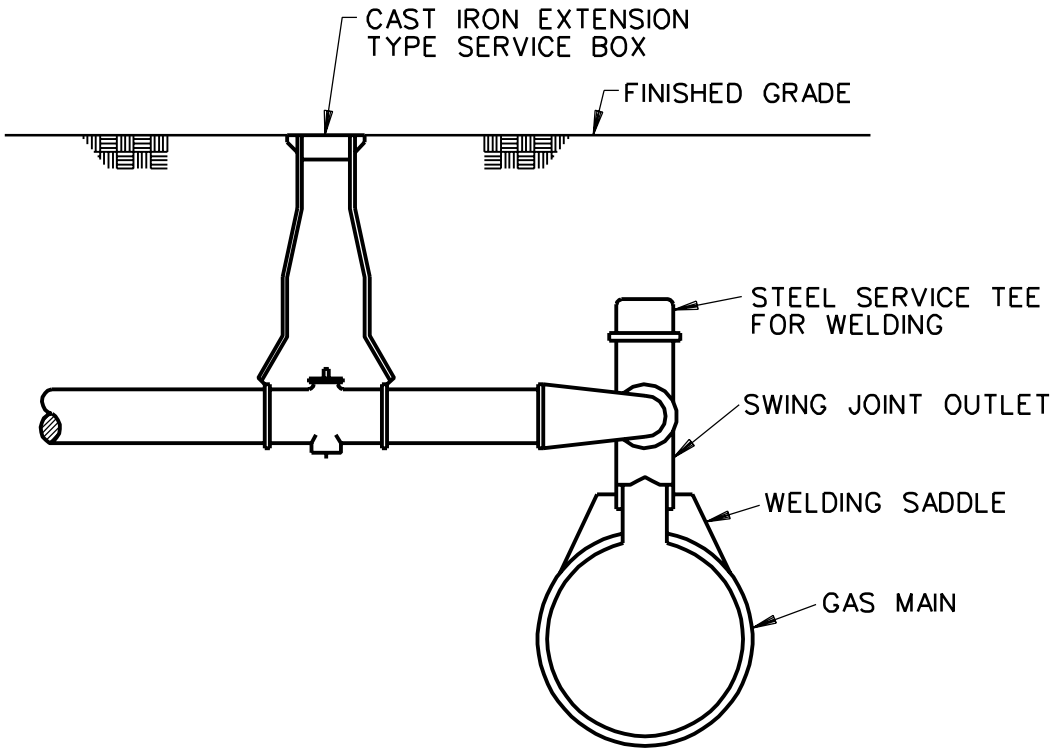

TYPICAL GAS SERVICE CONNECTION

N.T.S.

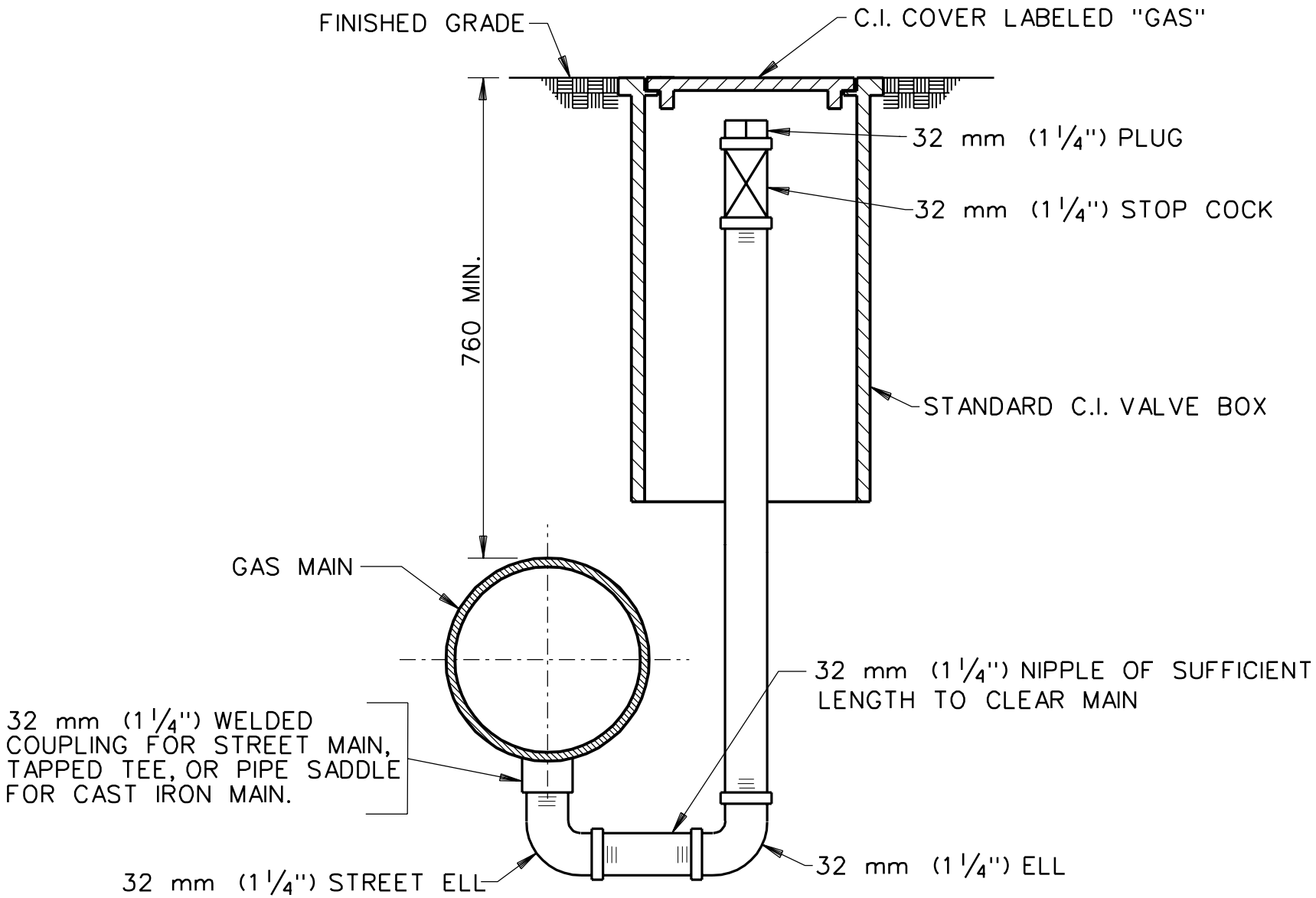

BLOW-OFF AND DRIP

N.T.S.

PLATE C69

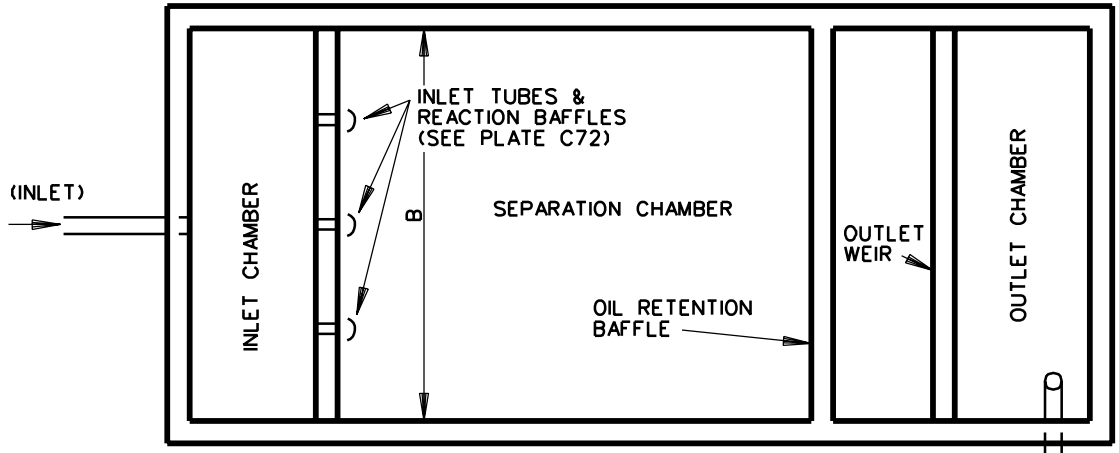

PLAN

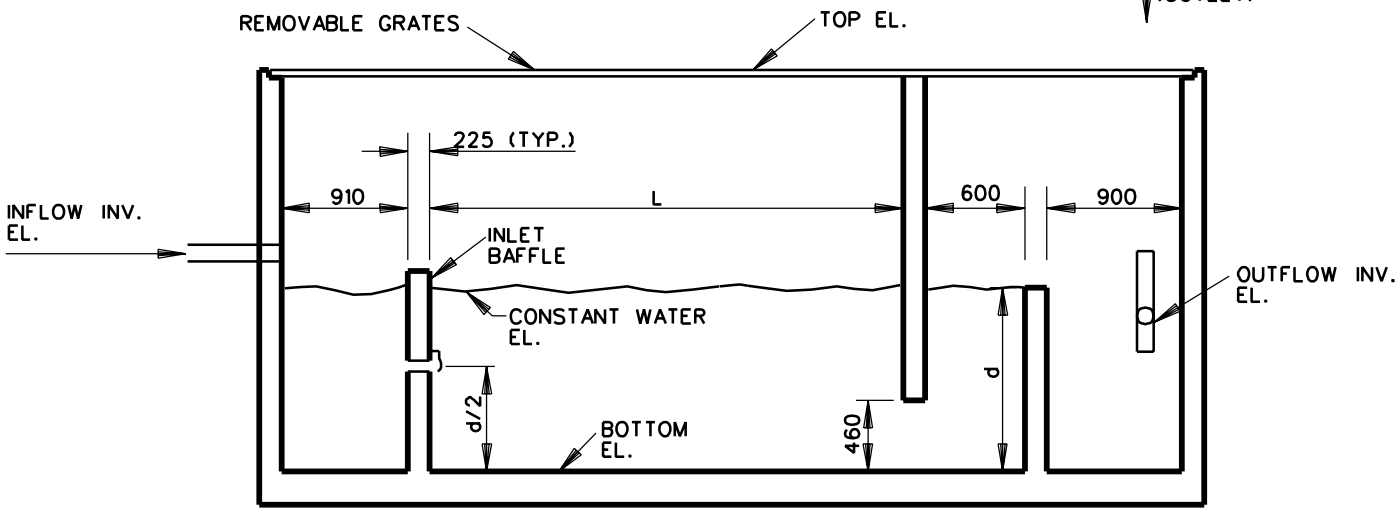

SECTION

NOTES TO DESIGNER:

FOR ARMY PROJECTS: $L = \frac{30\ Q_m}{d \times B}$

FOR AIR FORCE PROJECTS: $L = \frac{45\ Q_m}{d \times B}$

Q_m = DESIGN FLOW m^3/MIN.
$1.0m \le d \le 2.5m$
$2.0m \le B \le 6.0m$
$0.3m \le d/B \le 0.5m$
$L \ge 1.5m$

OIL/WATER SEPARATOR

N.T.S.

NOTE:
ALL DIMENSIONS ARE IN MILLIMETERS
UNLESS OTHERWISE SHOWN.

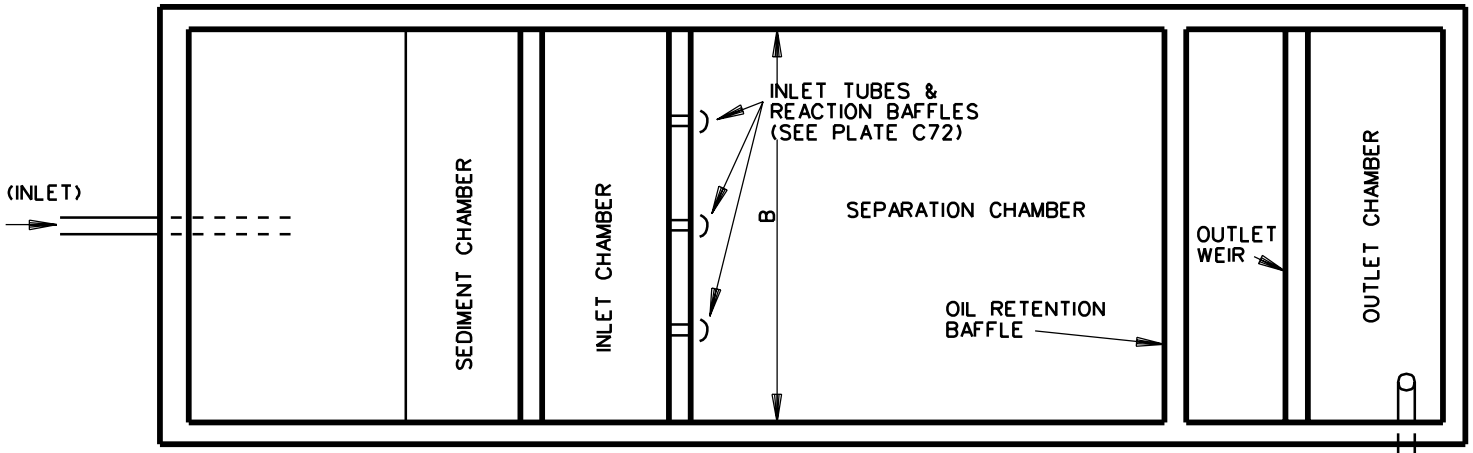

PLAN

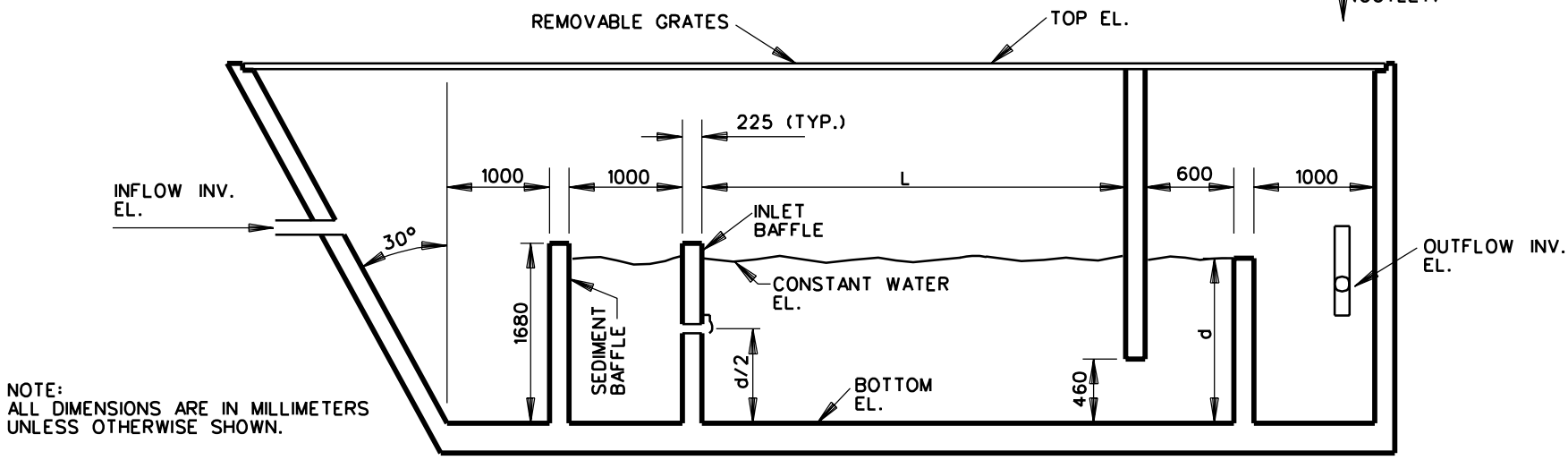

NOTE:
ALL DIMENSIONS ARE IN MILLIMETERS
UNLESS OTHERWISE SHOWN.

SECTION

OIL/WATER SEPARATOR

(WITH SEDIMENT CHAMBER)

N.T.S.

NOTES TO DESIGNER:

FOR ARMY PROJECTS: $L = \frac{30\ Q_m}{d \times B}$

FOR AIR FORCE PROJECTS: $L = \frac{45\ Q_m}{d \times B}$

Q_m = DESIGN FLOW m^3/MIN.
$1.0m \le d \le 2.5m$
$2.0m \le B \le 6.0m$
$0.3m \le d/B \le 0.5m$
$L \ge 1.5m$

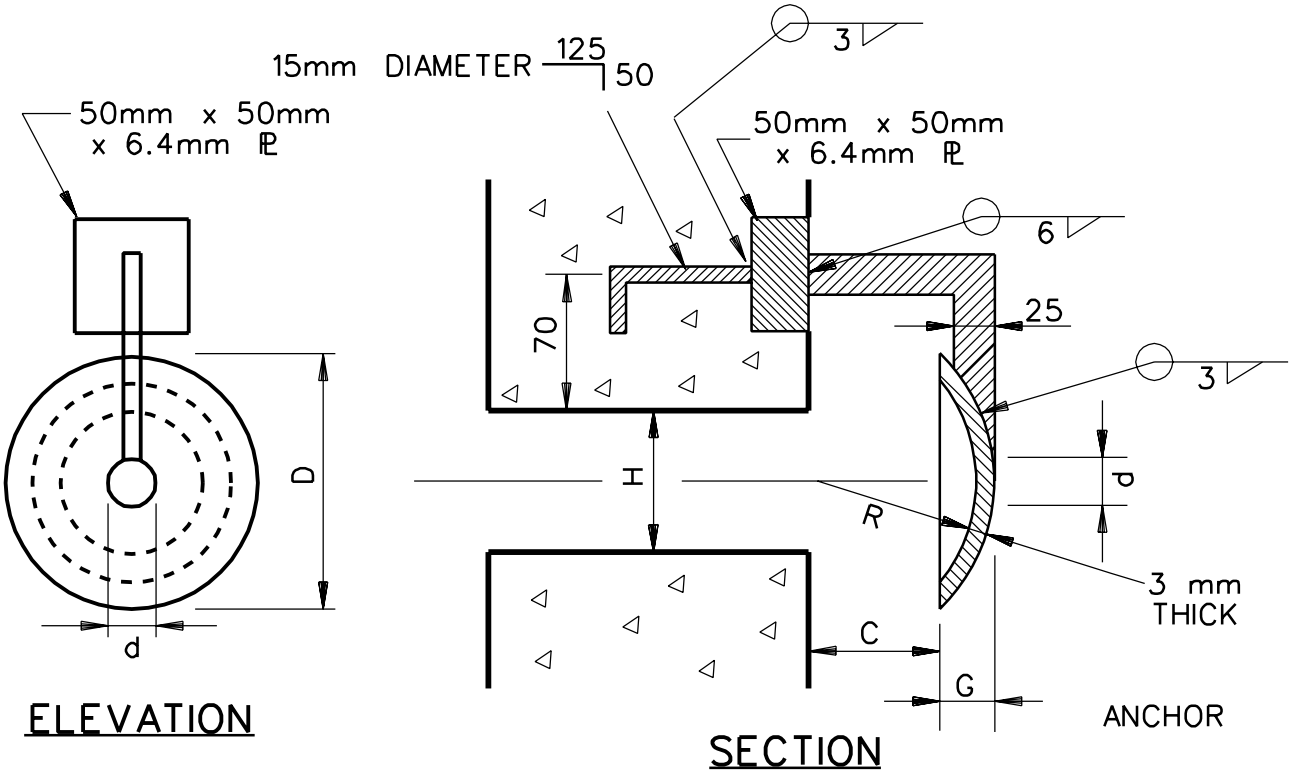

DETAILS - INLET TUBES & REACTION BAFFLES

TUBE DIA., H	R	D	d	C	G
25 (1")	25	50	20	25	12
38 (1 1/2")	38	65	22	32	12
50 (2")	50	75	25	38	13
65 (2 1/2")	65	90	28	44	14
75 (3")	75	100	32	50	15

NOTES:

1. PROVIDE NUMBER AND SIZE OF TUBES AND BAFFLES SO THAT THE VELOCITY OF FLOW THROUGH EACH TUBE IS ≈ 1.0 METER PER SECOND
2. A MINIMUM OF 2 TUBES WILL BE PROVIDED.
3. TUBES SHALL BE EQUALLY SPACED ACROSS THE SEPARATOR CHANNEL.
4. ALL DIMENSIONS ARE IN MILLIMETERS UNLESS OTHERWISE SHOWN.

DETAILS - INLET TUBES & REACTION BAFFLES (FOR OIL/WATER SEPARATORS)

N.T.S.

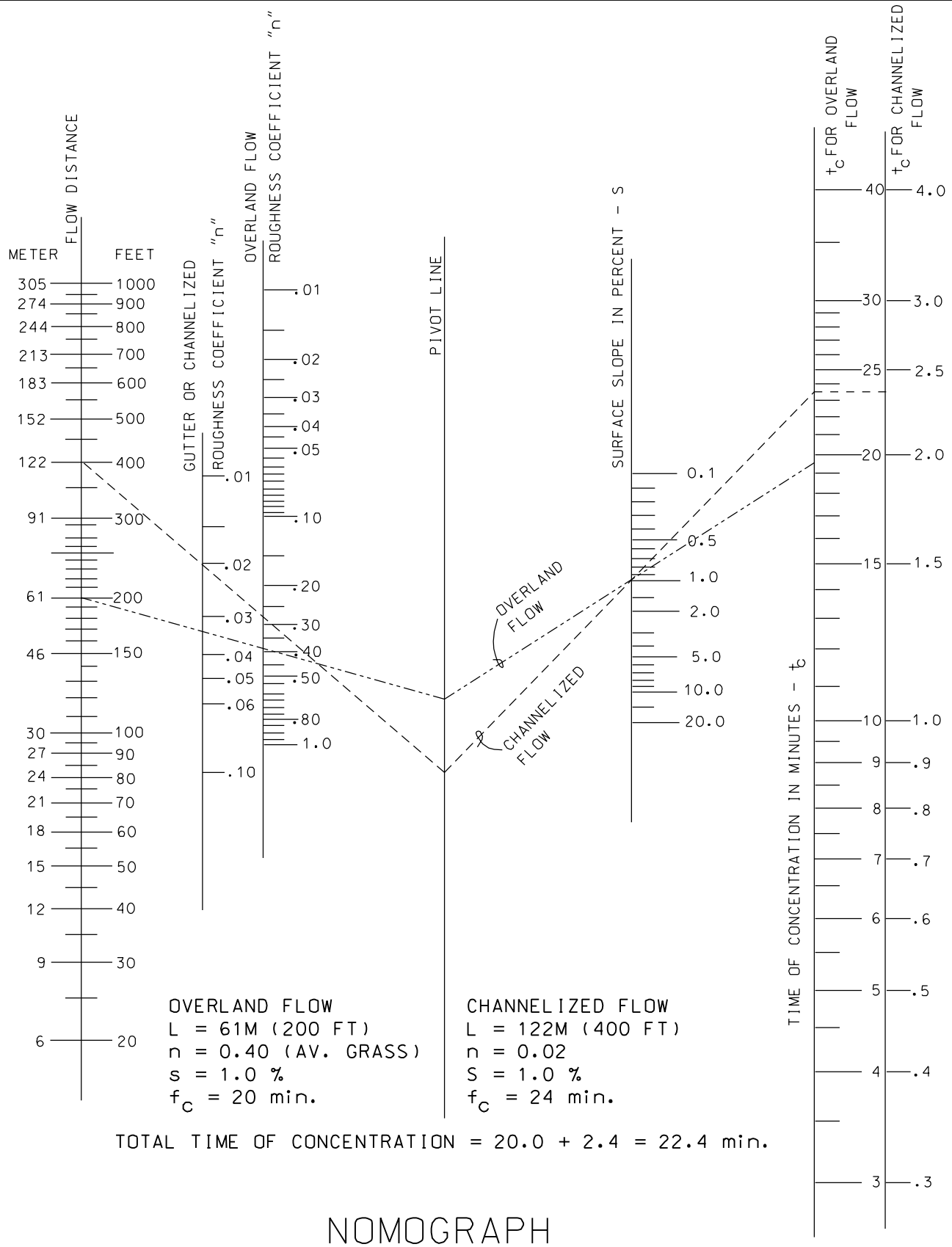

OVERLAND FLOW
L = 61M (200 FT)
n = 0.40 (AV. GRASS)
s = 1.0 %
f_c = 20 min.

CHANNELIZED FLOW
L = 122M (400 FT)
n = 0.02
S = 1.0 %
f_c = 24 min.

TOTAL TIME OF CONCENTRATION = 20.0 + 2.4 = 22.4 min.

NOMOGRAPH
FOR TIME OF CONCENTRATION

SHEET _____ OF _____ ; DATE _____

RAINFALL INTENSITY _____ mm/60 min

FREQUENCY _____

RUNOFF COMPUTATIONS

DRANAGE SECTION _____

PROJECT _____

LOCATION _____

DIVISION OFFICE _____

DISTRICT OFFICE _____

DRAINAGE AREA NO.	DRAINAGE AREA IN METER^3			L	S	t_c	I	F	I-F	C	Q	NOTES:
	PAVED n = 0.02	TURF n = 0.40	TOTAL	IN METER	AVERAGE SLOPE IN PERCENT	IN MINUTES	BASED ON t_c	INFIL-TRATION mm/HR			IN m^3/Sec.	
												TABLE _____

PLATE C74

SHEET _____ OF _____ ; DATE _____

RAINFALL INTENSITY _____ mm/60 min

FREQUENCY _____

SIZE AND PROFILE OF UNDERGROUND STORM DRAINS

TABLE _____

PROJECT _____

LOCATION _____

DIVISION OFFICE _____

DISTRICT OFFICE _____

INLET OR JUNCTION NUMBERS		DISTANCE BETWEEN DESIGN POINTS, IN METER MEASURED TO ℄ OF INLET OR JUNCTION	HYDRAULIC DESIGN DATA ON UNDERGROUND STORM DRAINS														NOTES:
			ADOPTED DESIGN										ELEVATION OF INVERT AT DESIGN POINT, (COL 2) IN METER		ELEVATION OF GROUND SURFACE, IN METER		
					HYDRAULIC GRADE LINE THRU PIPE LENGTH			HEAD LOSS AT CHANGE IN SECTION									
FROM	TO		DESIGN DISCHARGE CAPACITY IN m^3/Sec	SLECTED SIZE OF PIPE, IN METER	SLOPE IN m/m	RISE IN METER	ELEVATION AT ℄ OF UPSTREAM DESIGN PT.	VELOCITY OF INFLOW (V) IN m/Sec	VELOCITY HEAD $\frac{V^2}{2G}$	LOSS COEFFI-CIENT, K	HEAD LOSS, IN METER, $= K \frac{V^2}{2g}$	ELEVATION HYDROULIC GRADE LINE COL 8, PLUS HEAD LOSS COL 12	INCOMING PIPE	OUTGOING PIPE	NATURAL SURFACE	FINISHED GRADE	
1	2	3	4	5	6	7	8	9	10	11	12	13	14	15	16	17	18

PLATE C75

SHEET _____ OF _____ ; DATE _____

FREQUENCY _____

COMPUTED BY: _____

PHASING OF DISCHARGE FOR STORM DRAINAGE

DRANAGE SECTION _____

TABLE _____

PROJECT _____

LOCATION _____

DIVISION OFFICE _____

DISTRICT OFFICE _____

POINT OF DESIGN			CRITICAL RUNOFF TIME TO PRODUCE MAX. FLOW							RATE OF INFLOW AT DESIGN POINT, IN m^3/s, CORRESPONDING TO ADOPTED VALUE OF t' (COLUMN 10)									
DRAINAGE AREA OR INLET NUMBER	DISTANCE, METER		CRITICAL INLET OR AREA	CRITAL INLET OR AREA TIME t_c MIN.	ASSUMED VELOCITY OF FLOW, m/Sec	DRAIN TIME, MIN		APPROX. t'_c (COL. 5 + COL. 8)	ADOPTED t'_c IN MINUTES	INLET OR DRAINAGE AREA NUMBER									total
	FROM MAIN OUTLET	FROM PRECEDING POINT				FROM PRECEDING POINT	ACCUMULATED TOTAL												
1	2	3	4	5	6	7	8	9	10	11	12	13	14	15	16	17	18	19	20

PLATE C76

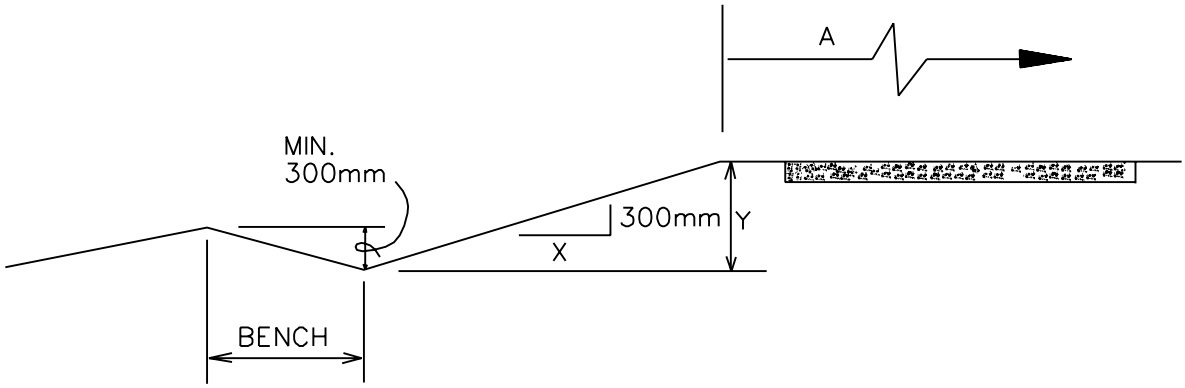

MAXIMUM LENGTH (METER) OF SLOPE WITHOUT BENCHING CAN BE DE3TERMINED BY FORMULA "Y = 4.5M - A/X " WHERE Y = HEIGHT OF CUT/FILL, X = SIDE SLOPE RATIO, A = MAX. OVERLAND FLOW ABOVE SLOPE.

- MAXIMUM VERTICAL DROP OF 4.5M BEFORE BENCHING OR DIVERSION.
- BENCH WIDTH: WIDE ENOUGH FOR CONSTRUCTION AND MAINTENANCE EQUIPMENT
- MAX. REVERSE SLOPE OF BENCH: 5 : 1
- BENCH MINIMUM VERTICAL DEPTH: 300mm
- BENCH GRADIENT TO OUTLET: 1 - 2%
- MAXIMUM FLOW LENGTH OF BENCH: 250 METER

NOTE: IN THE EVENT THAT THE COMPUTED VALUE OF Y IS LESS THAN ZERO SHEET FLOW SHALL BE INTERCEPTED WITHIN THE PAVED AREA OR AT THE EDGE OF THE PAVED AREA.

ANALYSIS OF SLOPE EROSION DUE TO SHEET FLOW

APPENDIX B - CHAPTER II

DESIGN CHECKLIST - CIVIL

CIVIL This checklist lists many important items required for clear and complete plans, specifications, and design analysis. It is not intended to be a comprehensive list of project site development items required to completely check project documents.

1.0 General:

1.1 In the early stages of the design, assure that the scope of work clearly defines all site development items including, demolition, security requirements, site layout, grading, storm drainage, utilities, turfing and landscaping work for the facility. Request additional information from district Technical Leader as needed to clarify project requirements.

1.2 Provide complete legends.

1.3 Include a north arrow and bar scale on all site plans.

2.0 Project Location Map:

2.1 Identify project site and indicate contractor's access and/or haul route(s).

2.2 Show waste and borrow areas when located on Government controlled property. Assure coordination with specifications sections. When waste and/or borrow areas are not available on Government property, add a note that the contractor shall provide these areas at his own expense and responsibility.

3.0 Demolition Plan:

3.1 Provide sufficient data to describe items to be removed such as fence types and heights and pavement types and thickness.

3.2 For items to be partially removed, provide dimensions to define limits of removal, and coordinate limits of existing work to remain with limits of construction.

3.3 Coordinate with utility plans, and show underground utility lines with types and sizes indicated to be removed on plans. Cap at mains when within new construction areas. For clarity utility demolition may be shown on utility plans.

4.0 Layout Plan:

4.1 Provide adequate horizontal controls to locate and layout all new project features. Horizontal controls shall be by dimensions to identifiable physical features or by coordinates. If coordinates are used, at least two known points shall be referenced.

4.2 Identify type(s) of all new surfacing and all existing paving that adjoins new project paving.

4.3 Provide cross-references by conventional system to details and sections found elsewhere in the drawings.

5.0 Grading Plan:

5.1 Provide location and elevation of at least two project benchmarks.

5.2 Assure that all grade changes are defined by spot elevations.

5.3 Assure that grading criteria given in the AEIM is complied with. Particular attention should be given to such items as the differential between finished floor elevations and adjacent outside finished grade, minimum and maximum grades in turfed and paved areas, and handicap criteria.

5.4 Indicate approximate grading limits.

6.0 Joint Pattern Plan:

6.1 Provide a layout plan of the concrete paving joint pattern. Show dimensions of the paving slabs and clearly differentiate between the different types of joints.

6.2 Provide spot elevations at ends of construction joints, and at all other breaks in grade to facilitate form setting and subgrade preparation. (Note: Contours and spot elevations on the grading plan are not sufficient vertical control for concrete paving.)

6.3 Include a legend to identify the different types of joints and paving.

7.0 Utility Plan:

7.1 Include a note that locations shown for existing underground utility lines are approximate, and the contractor

shall verify their exact location prior to commencement of any trenching or excavation operations.

7.2 Provide post indicator valve on water line serving fire sprinklers. Assure post indicators are located in accordance with NFPA 24.

7.3 Assure that building is protected by at least 2 fire hydrants within 107 meters (350 feet) of the building.

7.4 Provide sufficient number of valves on water and gas lines to facilitate construction and maintenance. Provide meters as required.

7.5 Coordinate utility plan with mechanical plan for utility connection points.

7.6 Provide thrust block details for water lines 152 mm (6-inches) and larger.

7.7 Assure that oil-water separators are properly sized and designed for the type of treatment required.

7.8 For aircraft hangars protected by AFFF Deluge Fire Systems, assure that discharge from floor drains is disposed of in accordance with NFPA 409.

8.0 Profiles:

8.1 Provide centerline profiles of all new streets and access roads. Indicate all new and existing utility crossings. Assure vertical curves are used for grade changes in excess of 1%.

8.2 Provide profiles for all new gravity drain lines such as sanitary sewer, industrial waste lines and storm drain lines.

8.3 Include profiles of lengthy pressure lines where frequent conflicts are encountered with intersecting utility lines.

9.0 Details:

9.1 Assure that all details are properly cross-referenced with the appropriate plans.

9.2 Assure that details are provided for all pavement juncture conditions and joints in accordance with the AEIM and referenced criteria.

9.3 Where new construction requires removal and replacement of existing pavement, include applicable details for pavement removal and replacement in accordance with details shown in the AEIM and referenced criteria. Assure that these details are coordinated with the specifications.

10.0 Design Analysis:

10.1 Provide calculations for sizing of all new utility lines.

10.2 Provide calculations for determination of storm runoff and sizing of storm drainage system.

10.3 Discuss rationale for design of all new features.

10.4 Discuss any deviations from criteria or standard practice and any waivers granted, pending or needed.

10.5 List any additional information or criteria needed to complete the design.

11.0 Specifications:

11.1 Coordinate drawings with the specifications to ensure that no conflicts exist between the drawings and specifications.

11.2 Ensure that coordination is effected between cross-referenced sections within the specifications.

11.3 Coordinate with other technical disciplines to prevent inter-disciplinary conflicts, e.g. concrete strength requirements in Division II specifications should match requirements in Division III concrete specifications.

11.4 Assure that submittal registers are included and edited for Government Approval "GA" and For Information Only "FIO" submittal.